Model Number

OMH-21 30mm-screws

Mounting bracket

Features

- Mounting bracket
- Simple and fast mounting

Screw length 30mm

Dimensions

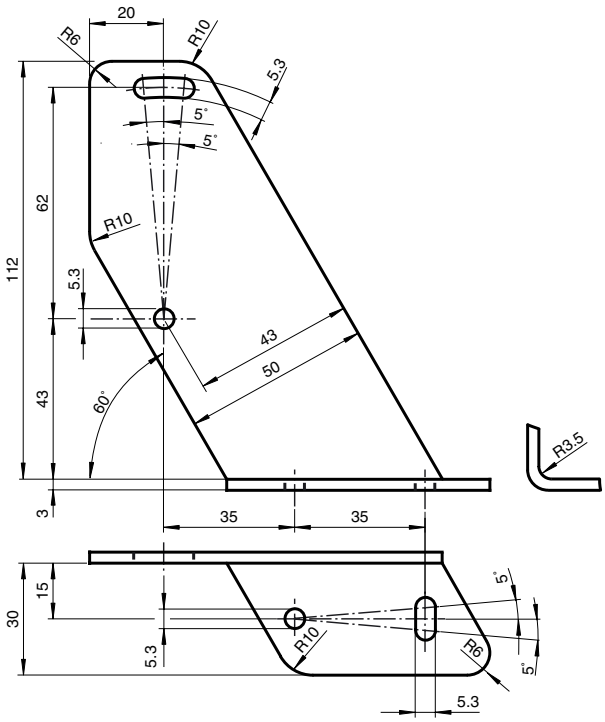

Technical data

Mechanical specifications	
Material	Steel, powder coated
Mass	approx. 175 g
Mounting	Mounting accessories included
Suitable series	
Series	RL23 RL28 RL29
Safety Series	SLA20 SLA28 SL29, SLA29

Release date: 2009-01-21 16:08 Date of issue: 2009-01-26 211122_ENG.xml

Copyright Pepperl+Fuchs, Printed in Germany