Model Number

NJ20P+U4+A2-V1

Features

- **Only for non-ferrous metals**
- **20 mm not embeddable**
- **4-wire DC**

Connection

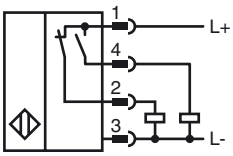

Dimensions

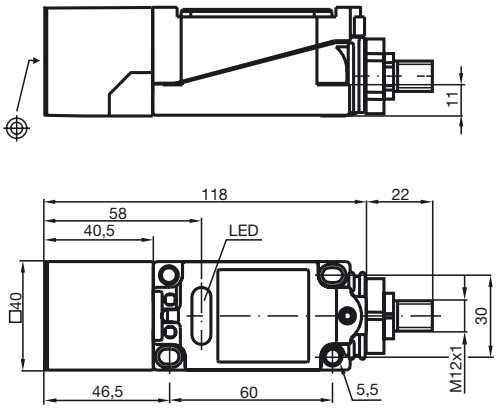

Technical Data

General specifications		
Switching element function		PNP NO/NC
Rated operating distance	s_n	20 mm
Installation		not embeddable
Output polarity		DC
Assured operating distance	s_a	0 ... 16.2 mm
Reduction factor r_{Al}		1
Reduction factor r_{Cu}		1
Reduction factor r_{St37}		0
Reduction factor r_{Brass}		1 (Minimum distance: 2 mm)
Nominal ratings		
Operating voltage	U_B	10 ... 30 V DC
Switching frequency	f	0 ... 200 Hz
Hysteresis	H	1 ... 10 typ. 5 %
Reverse polarity protected		reverse polarity protected
Short-circuit protection		pulsing
Voltage drop	U_d	≤ 3 V
Operating current	I_L	0 ... 200 mA
No-load supply current	I_0	≤ 20 mA
Operating voltage display		LED, green
Indication of the switching state		LED, yellow
Ambient conditions		
Ambient temperature		-25 ... 70 °C (-13 ... 158 °F)
Mechanical specifications		
Connection type		Device connector M12 x 1 , 4-pin
Housing material		PBT
Sensing face		PBT
Housing base		metal
Protection degree		IP68
Compliance with standards and directives		
Standard conformity		
Standards		EN 60947-5-2:2007 IEC 60947-5-2:2007
Approvals and certificates		
UL approval		cULus Listed, General Purpose
CSA approval		cCSAus Listed, General Purpose

Release date: 2011-08-12 09:52 Date of issue: 2011-08-12 093890_eng.xml