Model Number

NJ40+U1+W4

Features

- **Comfort series**
- **40 mm not embeddable**

Connection

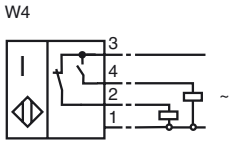

Accessories

V1-G
Non pre-wired cable socket
V1-W
Non pre-wired cable socket
MHW 01
Mounting aid
V1-M20-80
Receptacles

Dimensions

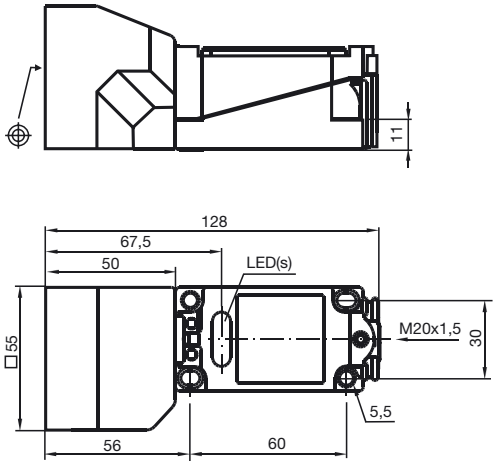

Technical Data

General specifications		
Switching element function		ACMake/Break function
Rated operating distance	s_n	40 mm
Installation		not embeddable
Output polarity		AC
Assured operating distance	s_a	0 ... 24.3 mm
Reduction factor r_{Al}		0.5
Reduction factor r_{Cu}		0.45
Reduction factor r_{V2A}		0.8
Nominal ratings		
Operating voltage	U_B	20 ... 253 V
Switching frequency	f	0 ... 20 Hz
Hysteresis	H	1 ... 10 typ. 5 %
Voltage drop	U_d	4 V
Momentary current (20 ms, 0.1 Hz)		≤ 4 A
Operating current	I_L	8 ... 500 mA
Off-state current	I_r	0 ... 2.5 mA typ.
Indication of the switching state		LED green: NC LED red: NO
Standard conformity		
Standards		IEC / EN 60947-5-2:2004
Ambient conditions		
Ambient temperature		-25 ... 70 °C (248 ... 343 K)
Storage temperature		-25 ... 85 °C (248 ... 358 K)
Mechanical specifications		
Connection type		terminal compartment
Core cross-section		up to 2.5 mm^2
Housing material		PBT
Sensing face		PBT
Protection degree		IP68
Note		1) In the temperature range below 0 °C, permissible operating voltage U_b 80...253 V Safety fuse ≤ 2 A (quick-blow) according to IEC 60127-2 Sheet 1 Recommendation: after a short circuit, check that the device is functioning correctly.
Approvals and certificates		
CCC approval		Certified by China Compulsory Certification (CCC)

Release date: 2009-05-07 11:32 Date of issue: 2009-05-07 088760_ENG.xml