Model Number

NBN3-F25F-E8-Y47291

Features

- **Satisfies machinery directive**

Connection

E8

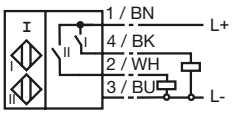

Dimensions

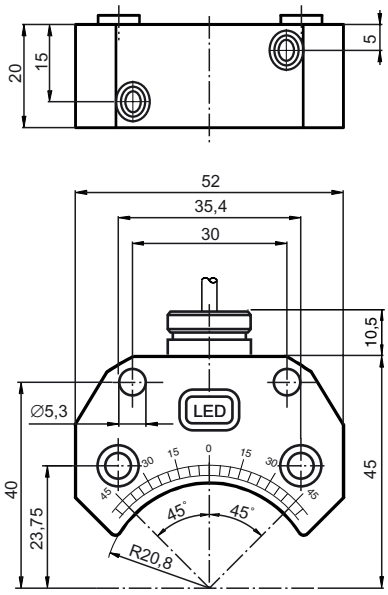

Technical Data

General specifications		
Switching element function		PNP Dual NO
Rated operating distance	s_n	3 mm
Installation		flush mountable
Output polarity		DC
Assured operating distance	s_a	0 ... 2.3 mm
Reduction factor r_{Al}		0.5
Reduction factor r_{V2A}		1
Reduction factor r_{St37}		1.1
Nominal ratings		
Operating voltage	U_B	10 ... 30 V
Switching frequency	f	0 ... 500 Hz
Hysteresis	H	typ. 5 %
Reverse polarity protected		all connections
Short-circuit protection		pulsing
Voltage drop	U_d	≤ 3 V
Operating current	I_L	0 ... 200 mA
Off-state current	I_r	0 ... 0.5 mA typ. 0.1 µA at 25 °C
No-load supply current	I_0	≤ 25 mA
Operating voltage display		LED, green
Indication of the switching state		LED, yellow
Ambient conditions		
Ambient temperature		-25 ... 70 °C (-13 ... 158 °F)
Storage temperature		-40 ... 85 °C (-40 ... 185 °F)
Mechanical specifications		
Connection type		cable PVC , 5 m
Core cross-section		4 x 0.34 mm^2
Housing material		PBT
Sensing face		PBT
Protection degree		IP67
Note		Installation in housing
Compliance with standards and directives		
Standard conformity		
Standards		EN 60947-5-2:2007 IEC 60947-5-2:2007
Approvals and certificates		
UL approval		cULus Listed, General Purpose
CSA approval		cCSAus Listed, General Purpose

Release date: 2010-11-03 16:04 Date of issue: 2010-12-16 047291_ENG.xml