Model Number

NCN30+U1+Z2

Features

- **Comfort series**
- **30 mm non-flush**

Connection

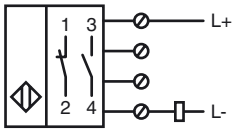

Accessories

MHW 01
Modular mounting bracket

MH 04-2057B
Mounting aid for VariKont and +U1+

Dimensions

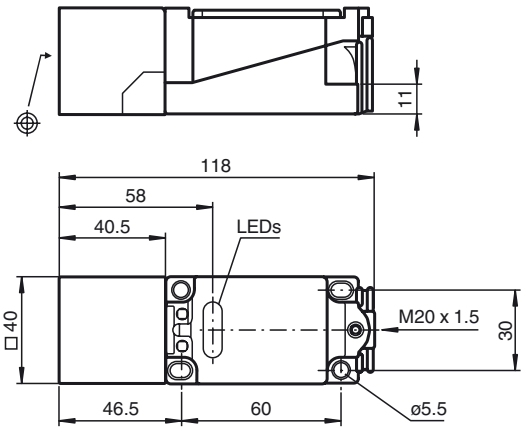

Technical Data

General specifications		
Switching element function		DC NO/NC
Rated operating distance	s_n	30 mm
Installation		non-flush
Output polarity		DC
Assured operating distance	s_a	0 ... 24.3 mm
Reduction factor r_{Al}		0.45
Reduction factor r_{Cu}		0.42
Reduction factor r_{304}		0.79
Nominal ratings		
Operating voltage	U_B	5 ... 60 V
Switching frequency	f	0 ... 150 Hz
Hysteresis	H	1 ... 10 typ. 5 %
Reverse polarity protected		tolerant
Short-circuit protection		pulsing
Voltage drop	U_d	≤ 5 V
Operating current	I_L	2 ... 200 mA
Lowest operating current	I_m	2 mA
Off-state current	I_r	0 ... 1 mA typ. 0.7 mA
Indication of the switching state		LED, yellow
Ambient conditions		
Ambient temperature		-25 ... 70 °C (-13 ... 158 °F)
Storage temperature		-25 ... 85 °C (-13 ... 185 °F)
Mechanical specifications		
Connection type		screw terminals
Core cross-section		up to 2.5 mm^2
Housing material		PBT
Sensing face		PBT
Protection degree		IP68
Compliance with standards and directives		
Standard conformity		
Standards		EN 60947-5-2:2007 IEC 60947-5-2:2007
Approvals and certificates		
UL approval		cULus Listed, General Purpose
CSA approval		cCSAus Listed, General Purpose
CCC approval		Certified by China Compulsory Certification (CCC)

Release date: 2012-05-04 09:25 Date of issue: 2012-05-04 030348_eng.xml

Copyright Pepperl+Fuchs
Pepperl+Fuchs Group www.pepperl-fuchs.com
USA: +1 330 486 0001 fa-info@us.pepperl-fuchs.com
Germany: +49 621 776-4411 fa-info@pepperl-fuchs.com
Singapore: +65 6779 9091 fa-info@sg.pepperl-fuchs.com