Model Number

NJ15+U4+W-T

Features

- **Limit switch style housing**
- **2-wire AC**
- **Temperature range -25 ... 100 °C (-13 ... 212 °F)**
- **Metal base 1/2" NPT**

Connection

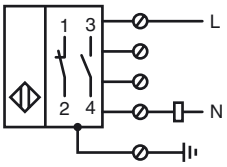

Accessories

MHW 01
Modular mounting bracket

Dimensions

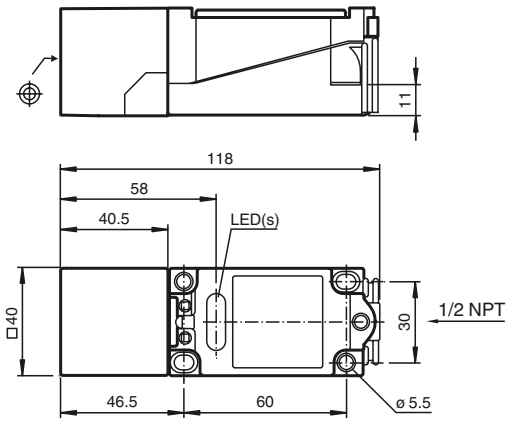

Technical Data

General specifications		
Switching element function		AC NO/NC
Rated operating distance	s_n	15 mm
Installation		non-flush
Output polarity		AC
Assured operating distance	s_a	0 ... 12.15 mm
Reduction factor r_{Al}		0.4
Reduction factor r_{Cu}		0.3
Reduction factor r_{304}		0.85
Nominal ratings		
Operating voltage	U_B	20 ... 253 V [1]
Switching frequency	f	0 ... 25 Hz
Hysteresis	H	typ. 3 %
Voltage drop	U_d	≤ 7 V
Momentary current (20 ms, 0.1 Hz)		0 ... 4000 mA
Operating current	I_L	10 ... 500 mA
Off-state current	I_r	0 ... 3 mA typ.
Operating voltage display		LED, green
Indication of the switching state		LED, yellow
Ambient conditions		
Ambient temperature		-25 ... 100 °C (-13 ... 212 °F)
Mechanical specifications		
Connection type		screw terminals
Core cross-section		up to 2.5 mm^2
Housing material		PBT/base of metal
Sensing face		PBT
Protection degree		IP68
Note		[1] In the temperature range below 0 °C, permissible operating voltage U_b 80...253 V Safety fuse ≤ 2 A (quick-blow) according to IEC 60127-2 Sheet 1 Recommendation: after a short circuit, check that the device is functioning correctly.
Compliance with standards and directives		
Standard conformity		
Standards		EN 60947-5-2:2007 IEC 60947-5-2:2007
Approvals and certificates		
UL approval		cULus Listed, General Purpose
CSA approval		cCSAus Listed, General Purpose

Release date: 2012-06-20 07:53 Date of issue: 2012-06-20 016677_eng.xml