Model Number

NJ15+U4+DW2-1

Features

- **Surface mount**
- **Sensing range 15 mm**
- **3-wire AC**
- **Frequency range 0.1 to 1 Hz**

Connection

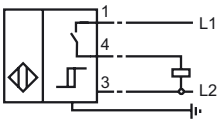

Dimensions

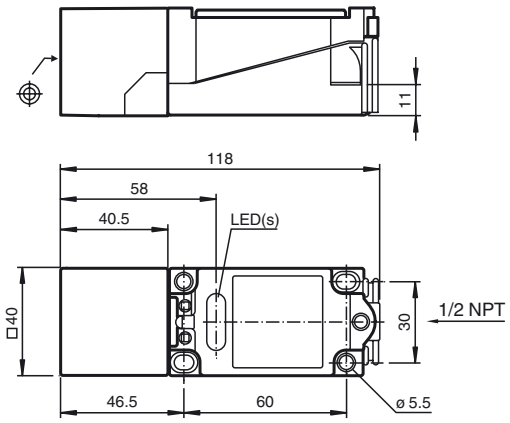

Technical Data

General specifications		
Switching element function		NO
Frequency range		0.1 ... 1 Hz , adjustable
Rated operating distance	s_n	15 mm
Installation		flush
Output polarity		AC
Assured operating distance	s_a	0 ... 12.15 mm
Reduction factor r_{Al}		0.4
Reduction factor r_{Cu}		0.3
Reduction factor r_{304}		0.85
Nominal ratings		
Operating voltage	U_B	90 ... 250 V AC
Hysteresis	H	3 ... 15 typ. 5
Short-circuit protection		no
Voltage drop	U_d	≤ 2 V AC
Momentary current (20 ms, 0.1 Hz)		0 ... 1000 mA
Operating current	I_L	0 ... 150 mA
Off-state current	I_r	≤10 µA
Indication of the switching state		LED 1: yellow
Damping indicator		LED 2: yellow
Ambient conditions		
Ambient temperature		-25 ... 70 °C (-13 ... 158 °F)
Mechanical specifications		
Connection type		screw terminals
Core cross-section		up to 2.5 mm^2
Housing material		PBT/metal
Sensing face		PBT
Protection degree		IP67
Note		1) In the temperature range below 0 °C, permissible operating voltage U_b 80...253 V Safety fuse ≤ 0.2 A (quick-blow) according to IEC 60127-2 Sheet 1 Recommendation: after a short circuit, check that the device is functioning correctly.
Compliance with standards and directives		
Standard conformity		
Standards		IEC / EN 60947-5-2:2004
Approvals and certificates		
UL approval		cULus Listed, General Purpose
CSA approval		cCSAus Listed, General Purpose

Release date: 2012-06-20 07:53 Date of issue: 2012-06-20 015721_eng.xml