This page intentionally left blank

REV.	BY	CK.	DATE	AUTH. NO. OR ECN NO.
06				NO.
05				NO.
04				NO.
03				NO.
02		QJ	06-16-2008	NO. 1033004
01	QJ	Fr	04-04-2008	NO. 1032302

THIS DRAWING IS THE PROPERTY OF THE ROCKWELL AUTOMATION
AND MAY NOT BE COPIED, USED OR DISCLOSED FOR ANY PURPOSE EXCEPT AS AUTHORIZED IN WRITING BY THE ROCKWELL AUTOMATION

CAD DIRECTORY:

CAD FILE NAME:

PROJ Eng. STI
DATE 05-27-08

Mech Eng.
DATE

APPD. BY QJ
DATE 05-27-08

LOCATION DIERIKON

DR.
DATE

CK. Fr/Ru
DATE 05-27-08

APPD.
DATE

INDEX NO.

ACAD UNIT NO.

POWERFLEX 700AFE

TITLE: CIRCUIT CONTROL WIRING SCHEMATIC
20YD460A0ANNANA0 (FI10 IP21 400-500V)
20YF325A0ANNANA0 (FI10 IP21 600-690V)

DWG. NO. **379188-2**

DWG. SIZE

SH 1
OF 16

Table of Contents

Page	Page Description
1	Title Page
2	Table of Contents
3	Layout Drawing
4	Layout Drawing
5	Layout Drawing
6	Circuit Diagram
7	Circuit Diagram
8	Circuit Diagram
9	Circuit Diagram
10	Circuit Diagram
11	Circuit Diagram
12	Terminal Diagram
13	Terminal Diagram
14	Terminal Diagram
15	Terminal Diagram
16	Wiring List

REV.	BY	CK.	DATE	AUTH. NO. OR ECN NO.
06				NO.
05				NO.
04				NO.
03				NO.
02		QJ	06-16-2008	NO. 1033004
01	QJ	Fr	04-04-2008	NO. 1032302

THIS DRAWING IS THE PROPERTY OF THE ROCKWELL AUTOMATION
AND MAY NOT BE COPIED, USED OR DISCLOSED FOR ANY PURPOSE EXCEPT AS AUTHORIZED IN WRITING BY THE ROCKWELL AUTOMATION

CAD DIRECTORY:

CAD FILE NAME:

PROJ Eng. STI
DATE 05-27-08

Mech Eng.
DATE

APPD. BY QJ
DATE 05-27-08

LOCATION DIERIKON

DR.
DATE

CK. Fr/Ru
DATE 05-27-08

APPD.
DATE

INDEX NO.

ACAD UNIT NO.

POWERFLEX 700AFE

TITLE: CIRCUIT CONTROL WIRING SCHEMATIC
20YD460A0ANNANA0 (FI10 IP21 400-500V)
20YF325A0ANNANA0 (FI10 IP21 600-690V)

DWG. NO. **379188-2**

DWG. SIZE

SH 2
OF 16

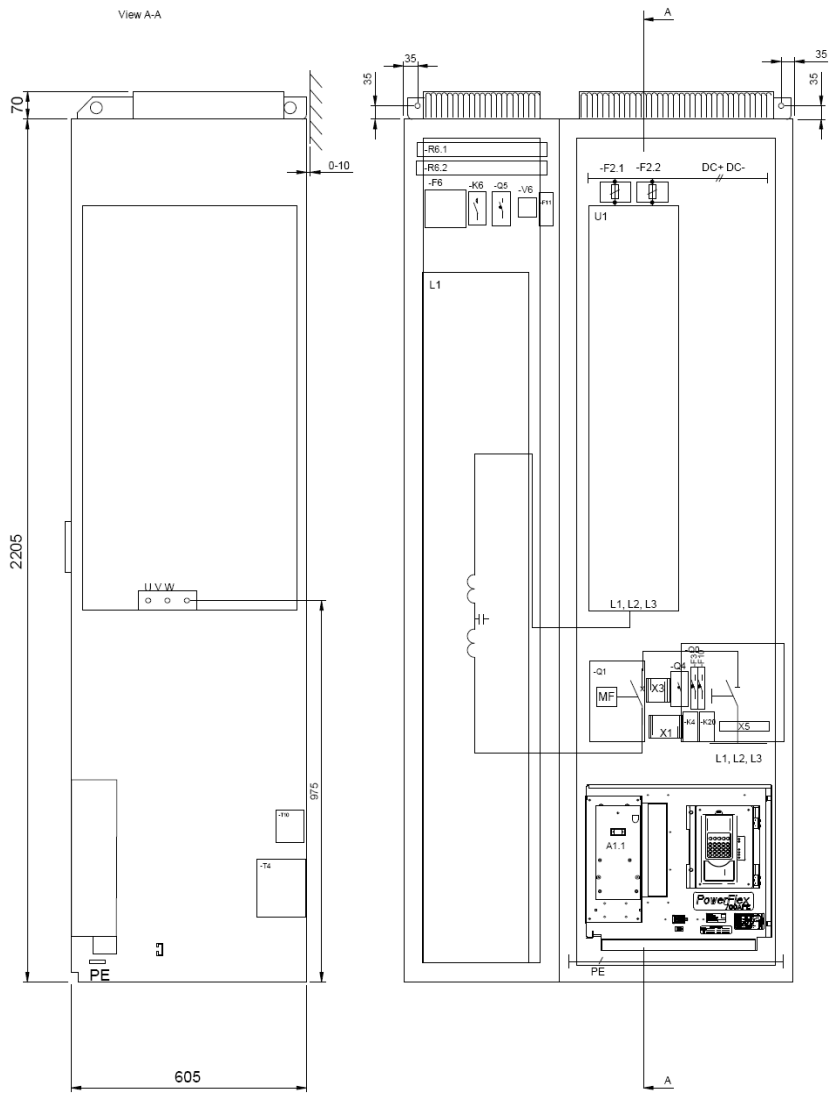

06				NO.	THIS DRAWING IS THE PROPERTY OF THE ROCKWELL AUTOMATION AND MAY NOT BE COPIED, USED OR DISCLOSED FOR ANY PURPOSE EXCEPT AS AUTHORIZED IN WRITING BY THE ROCKWELL AUTOMATION	PROJ Eng. STI DATE 05-27-08	DR. DATE		POWERFLEX 700AFE		
05				NO.		Mech Eng. DATE	CK. Fr/Ru DATE 05-27-08		TITLE: CIRCUIT CONTROL WIRING SCHEMATIC 20YD460A0ANNANA0 (FI10 IP21 400-500V) 20YF325A0ANNANA0 (FI10 IP21 600-690V)		
04				NO.							
03				NO.	CAD DIRECTORY:	APPD. BY QJ DATE 05-27-08	APPD. DATE				
02		QJ	06-16-2008	NO. 1033004							
01	QJ	Fr	04-04-2008	NO. 1032302	CAD FILE NAME:	LOCATION DIERIKON	INDEX NO.	ACAD UNIT NO.	DWG. NO. 379188-2	DWG. SIZE	SH 3 OF 16
REV.	BY	CK.	DATE	AUTH. NO. OR ECN NO.							

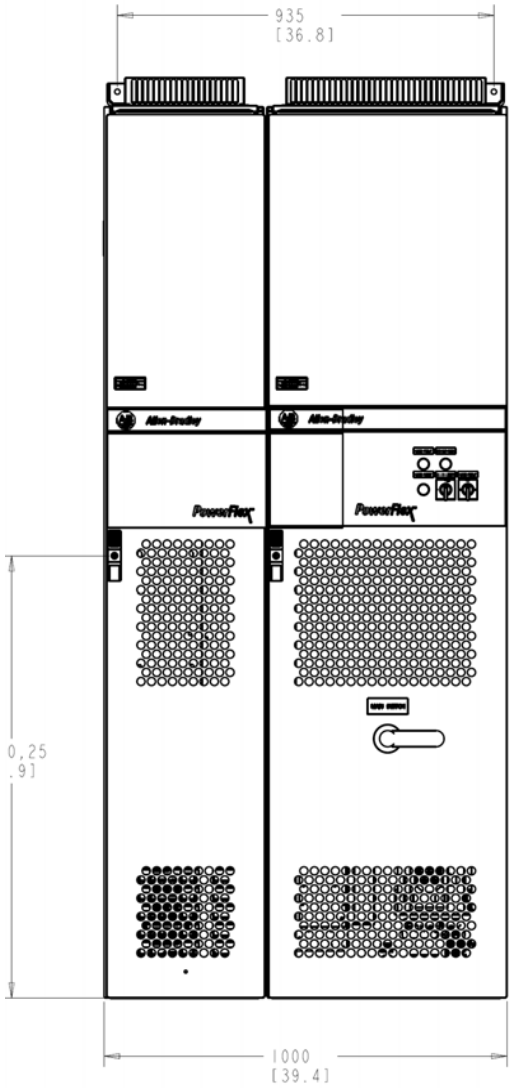

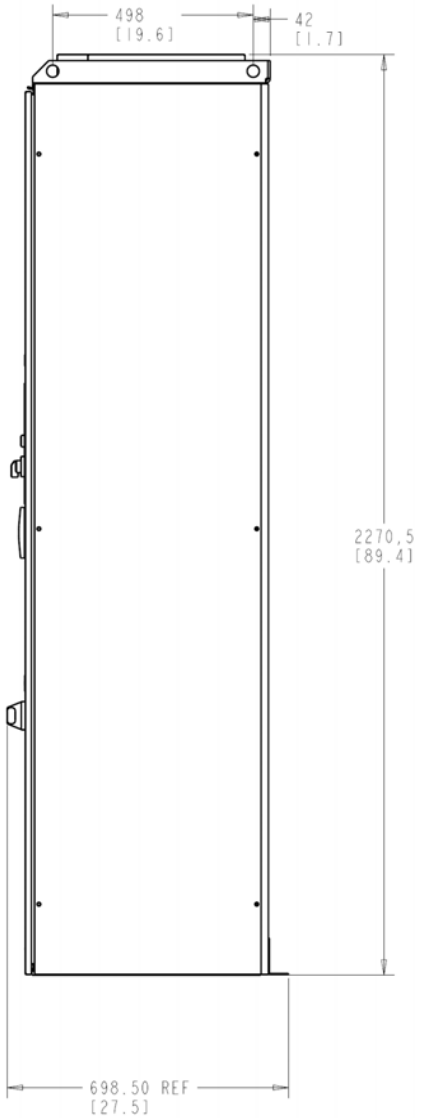

06				NO.	THIS DRAWING IS THE PROPERTY OF THE ROCKWELL AUTOMATION AND MAY NOT BE COPIED, USED OR DISCLOSED FOR ANY PURPOSE EXCEPT AS AUTHORIZED IN WRITING BY THE ROCKWELL AUTOMATION		PROJ Eng. DATE STI 05-27-08	DR. DATE		POWERFLEX 700AFE		
05				NO.			Mech Eng. DATE	CK. DATE Fr/Ru 05-27-08		TITLE: CIRCUIT CONTROL WIRING SCHEMATIC 20YD460A0ANNANA0 (FI10 IP21 400-500V) 20YF325A0ANNANA0 (FI10 IP21 600-690V)		
04				NO.								
03				NO.	CAD DIRECTORY:		APPD. BY DATE QJ 05-27-08	APPD. DATE				
02		QJ	06-16-2008	NO. 1033004								
01	QJ	Fr	04-04-2008	NO. 1032302	CAD FILE NAME:		LOCATION DIERIKON	INDEX NO.	ACAD UNIT NO.	DWG. NO. 379188-2	DWG. SIZE	SH 4 OF 16
REV.	BY	CK.	DATE	AUTH. NO. OR ECN NO.								

Fixing to the floor only, X) Accessory bracket needed, Rittal nr. 8800.210

Floor fixing

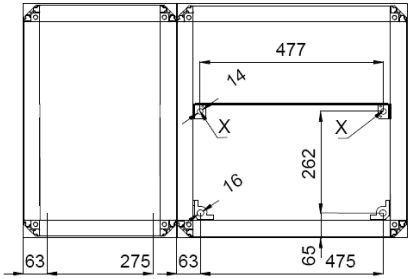

Bottom cabling IP21 through hole

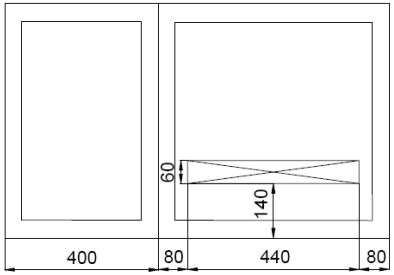

REV.	BY	CK.	DATE	AUTH. NO. OR ECN NO.
06				NO.
05				NO.
04				NO.
03				NO.
02		QJ	06-16-2008	NO. 1033004
01	QJ	Fr	04-04-2008	NO. 1032302

THIS DRAWING IS THE PROPERTY OF THE ROCKWELL AUTOMATION
AND MAY NOT BE COPIED, USED OR DISCLOSED FOR ANY PURPOSE EXCEPT AS AUTHORIZED IN WRITING BY THE ROCKWELL AUTOMATION

CAD DIRECTORY:

CAD FILE NAME:

PROJ Eng. STI
DATE 05-27-08

Mech Eng.
DATE

APPD. BY QJ
DATE 05-27-08

LOCATION DIERIKON

DR.
DATE

CK. Fr/Ru
DATE 05-27-08

APPD.
DATE

INDEX NO.

ACAD UNIT NO.

POWERFLEX 700AFE

TITLE: CIRCUIT CONTROL WIRING SCHEMATIC
20YD460A0ANNANA0 (FI10 IP21 400-500V)
20YF325A0ANNANA0 (FI10 IP21 600-690V)

DWG. NO. **379188-2**

DWG. SIZE

SH 5
OF 16

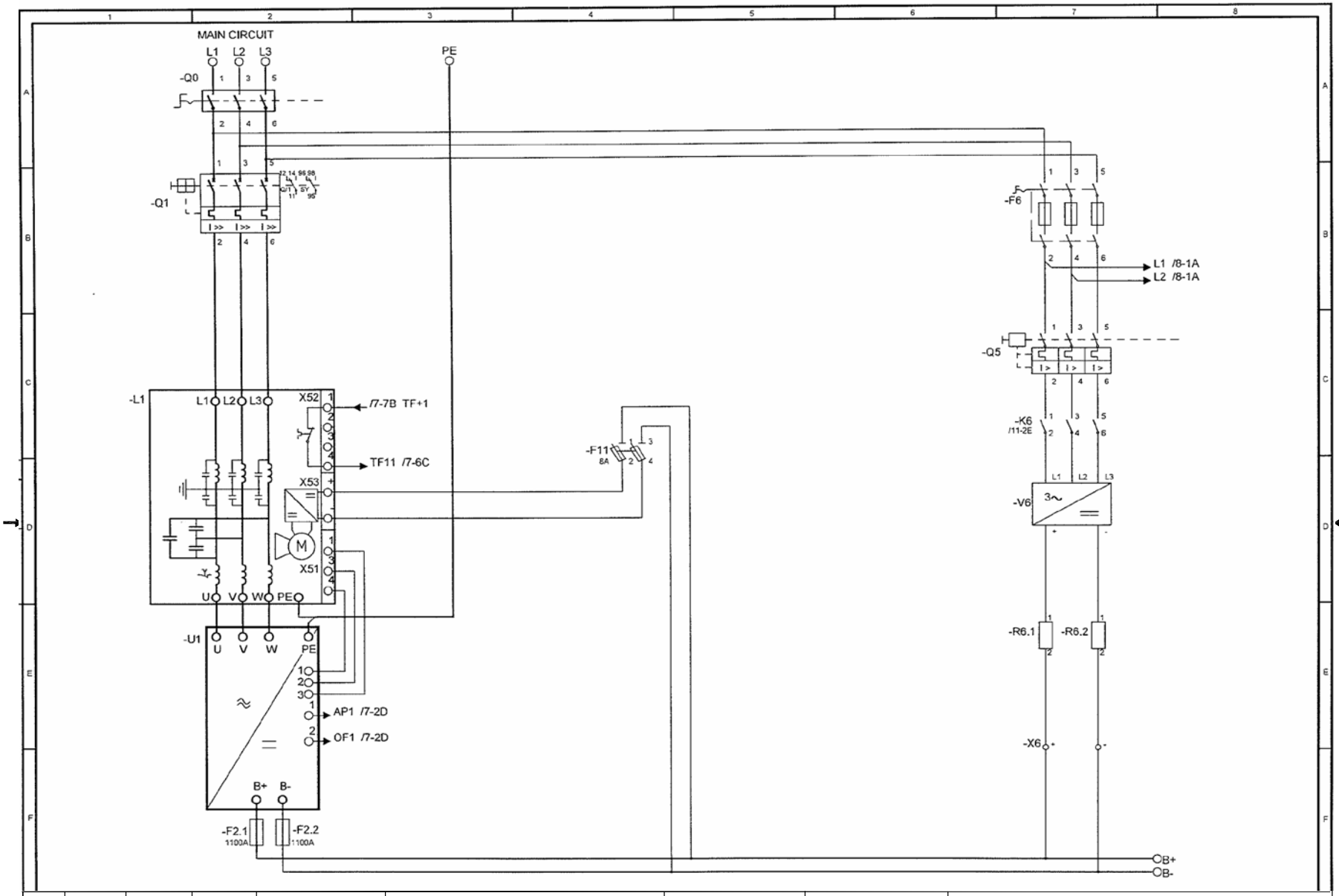

06				NO.	THIS DRAWING IS THE PROPERTY OF THE ROCKWELL AUTOMATION AND MAY NOT BE COPIED, USED OR DISCLOSED FOR ANY PURPOSE EXCEPT AS AUTHORIZED IN WRITING BY THE ROCKWELL AUTOMATION	PROJ Eng. STI DATE 05-27-08	DR. DATE		POWERFLEX 700AFE		
05				NO.		Mech Eng. DATE	CK. Fr/Ru DATE 05-27-08		TITLE: CIRCUIT CONTROL WIRING SCHEMATIC 20YD460A0ANNANA0 (FI10 IP21 400-500V) 20YF325A0ANNANA0 (FI10 IP21 600-690V)		
04				NO.							
03				NO.	CAD DIRECTORY:	APPD. BY QJ DATE 05-27-08	APPD. DATE				
02		QJ	06-16-2008	NO. 1033004							
01	QJ	Fr	04-04-2008	NO. 1032302	CAD FILE NAME:	LOCATION DIERIKON	INDEX NO.	ACAD UNIT NO.	DWG. NO. 379188-2	DWG. SIZE	SH 6 OF 16
REV.	BY	CK.	DATE	AUTH. NO. OR ECN NO.							

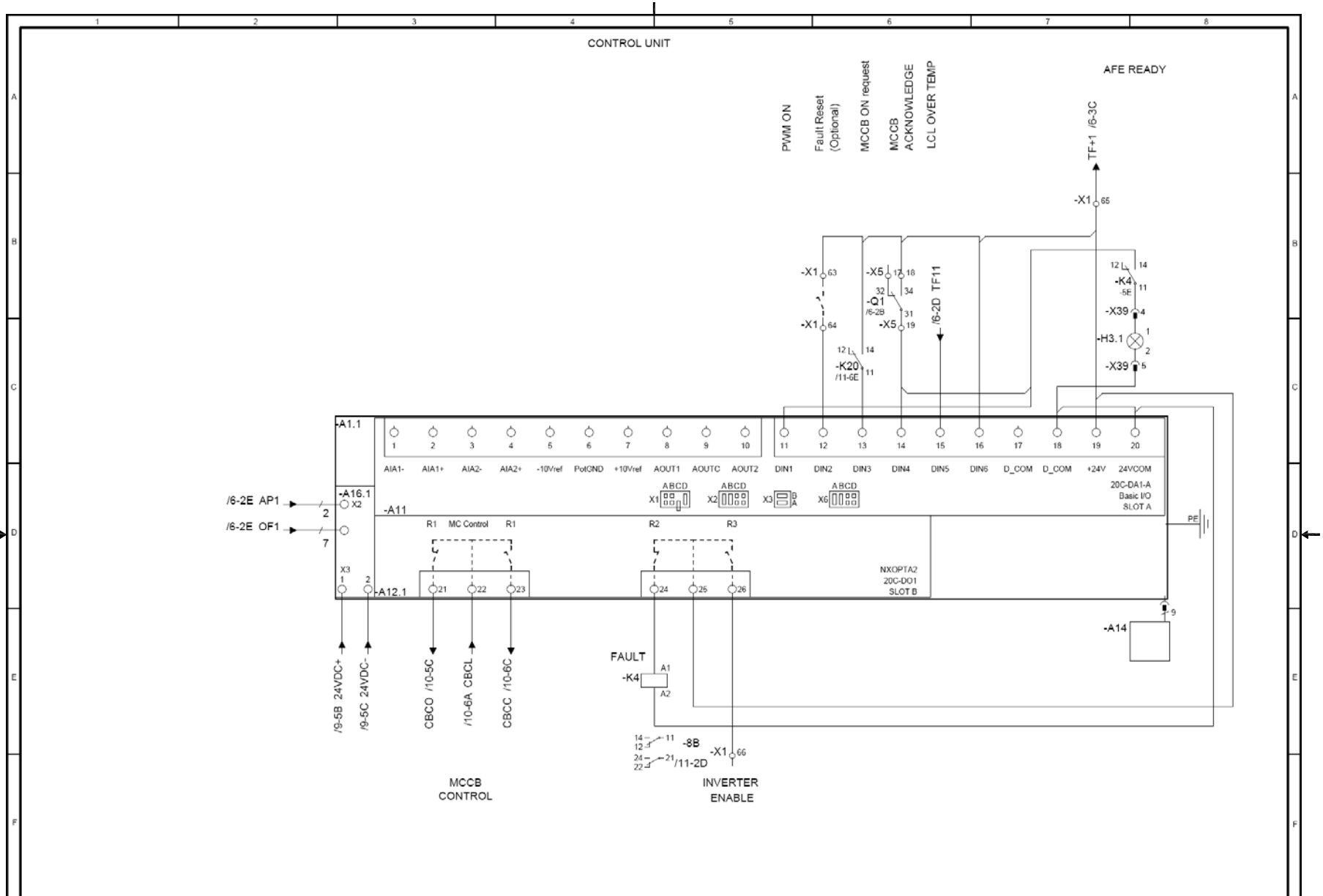

06				NO.	THIS DRAWING IS THE PROPERTY OF THE ROCKWELL AUTOMATION AND MAY NOT BE COPIED, USED OR DISCLOSED FOR ANY PURPOSE EXCEPT AS AUTHORIZED IN WRITING BY THE ROCKWELL AUTOMATION	PROJ Eng. DATE STI 05-27-08	DR. DATE	POWERFLEX 700AFE			
05				NO.		Mech Eng. DATE	CK. DATE Fr/Ru 05-27-08	TITLE: CIRCUIT CONTROL WIRING SCHEMATIC 20YD460A0ANNANA0 (FI10 IP21 400-500V) 20YF325A0ANNANA0 (FI10 IP21 600-690V)			
04				NO.							
03				NO.	CAD DIRECTORY:	APPD. BY DATE QJ 05-27-08	APPD. DATE				
02		QJ	06-16-2008	NO. 1033004							
01	QJ	Fr	04-04-2008	NO. 1032302	CAD FILE NAME:	LOCATION DIERIKON	INDEX NO.	ACAD UNIT NO.	DWG. NO. 379188-2	DWG. SIZE	SH 7 OF 16
REV.	BY	CK.	DATE	AUTH. NO. OR ECN NO.							

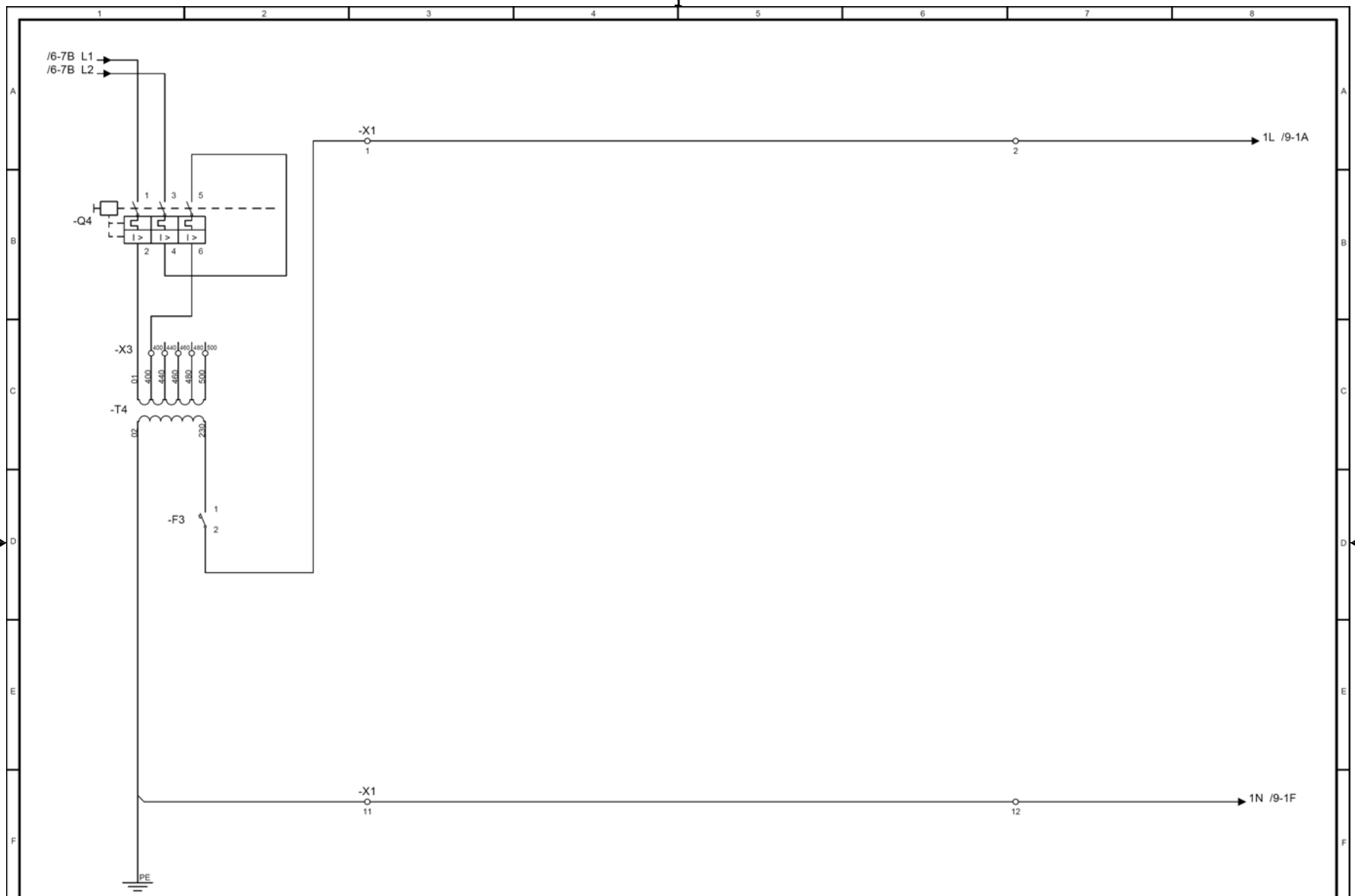

06				NO.	THIS DRAWING IS THE PROPERTY OF THE ROCKWELL AUTOMATION AND MAY NOT BE COPIED, USED OR DISCLOSED FOR ANY PURPOSE EXCEPT AS AUTHORIZED IN WRITING BY THE ROCKWELL AUTOMATION	PROJ Eng. DATE STI 05-27-08	DR. DATE		POWERFLEX 700AFE		
05				NO.		Mech Eng. DATE	CK. DATE Fr/Ru 05-27-08		TITLE: CIRCUIT CONTROL WIRING SCHEMATIC 20YD460A0ANNANA0 (FI10 IP21 400-500V)		
04				NO.							
03				NO.	CAD DIRECTORY:	APPD. BY DATE QJ 05-27-08	APPD. DATE				
02		QJ	06-16-2008	NO. 1033004							
01	QJ	Fr	04-04-2008	NO. 1032302	CAD FILE NAME:	LOCATION DIERIKON	INDEX NO.	ACAD UNIT NO.	DWG. NO. 379188-2	DWG. SIZE	SH 8(a) OF 16
REV.	BY	CK.	DATE	AUTH. NO. OR ECN NO.							

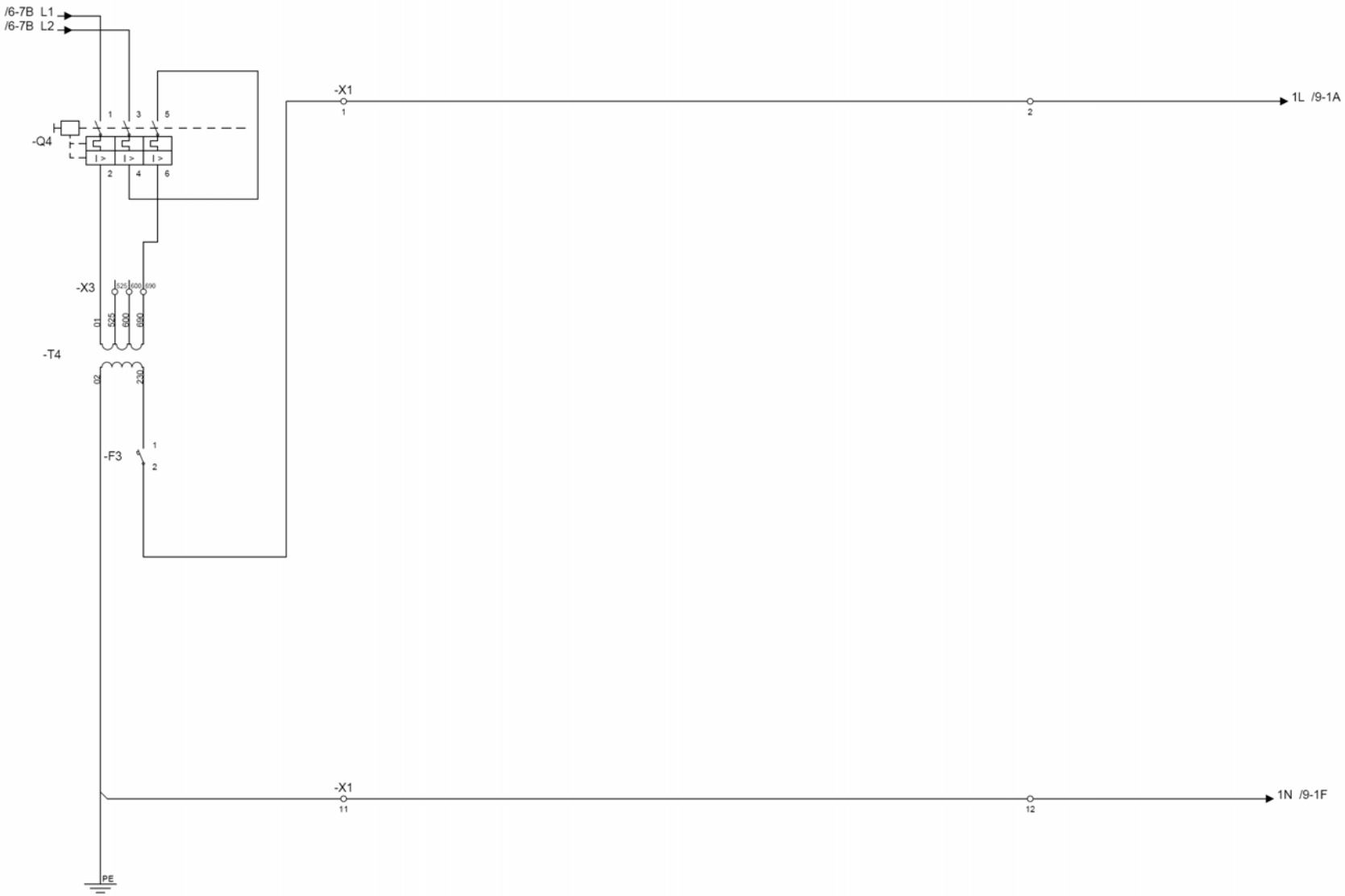

06				NO.	THIS DRAWING IS THE PROPERTY OF THE ROCKWELL AUTOMATION AND MAY NOT BE COPIED, USED OR DISCLOSED FOR ANY PURPOSE EXCEPT AS AUTHORIZED IN WRITING BY THE ROCKWELL AUTOMATION	PROJ Eng. STI DATE 05-27-08	DR. DATE		POWERFLEX 700AFE		
05				NO.		Mech Eng. DATE	CK. Fr/Ru DATE 05-27-08		TITLE: CIRCUIT CONTROL WIRING SCHEMATIC		
04				NO.							
03				NO.	CAD DIRECTORY:	APPD. BY QJ DATE 05-27-08	APPD. DATE		20YF325A0ANNANA0 (FI10 IP21 600-690V)		
02		QJ	06-16-2008	NO. 1033004							
01	QJ	Fr	04-04-2008	NO. 1032302	CAD FILE NAME:	LOCATION DIERIKON	INDEX NO.	ACAD UNIT NO.	DWG. NO. 379188-2	DWG. SIZE	SH 8(b) OF 16
REV.	BY	CK.	DATE	AUTH. NO. OR ECN NO.							

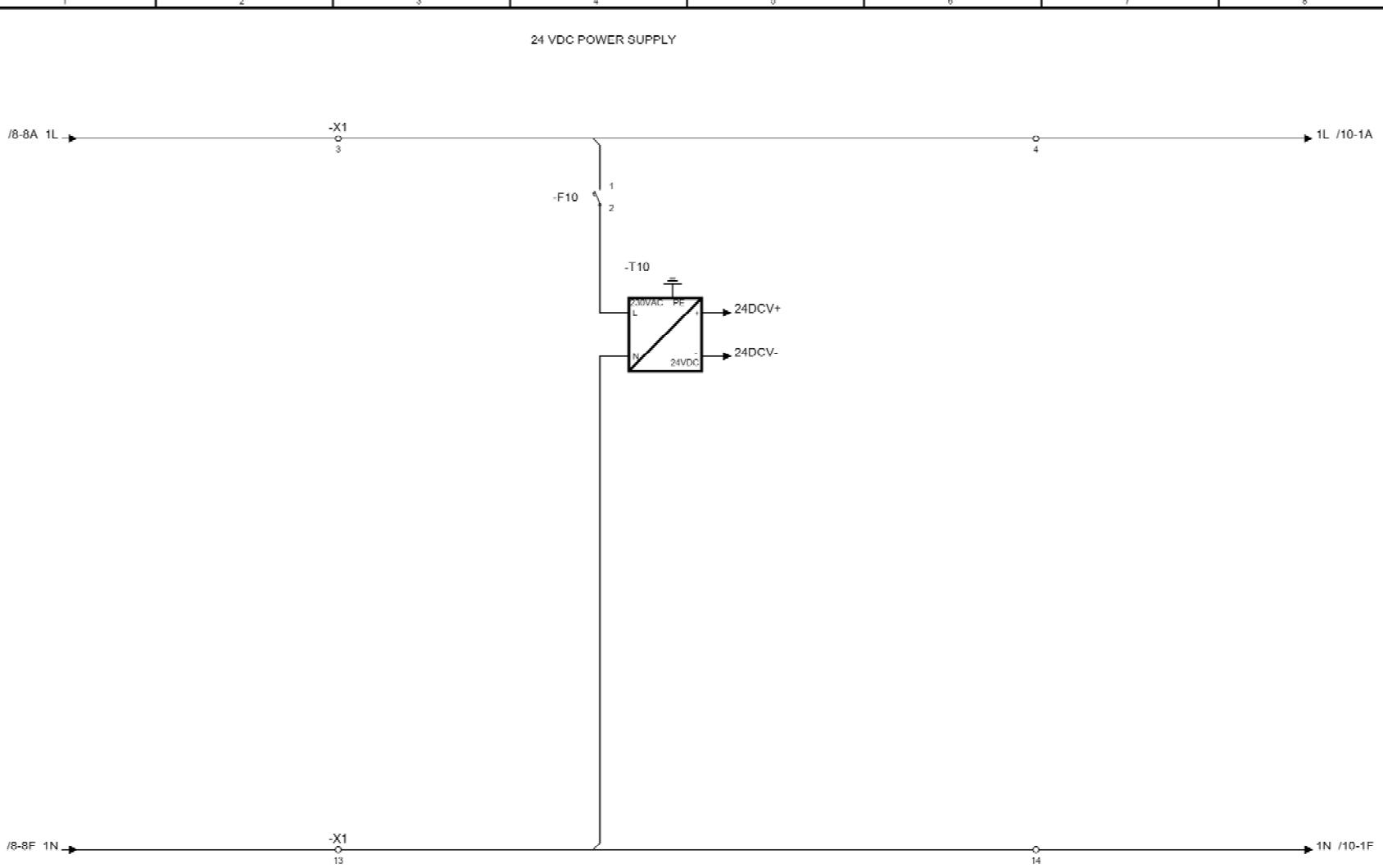

06				NO.	THIS DRAWING IS THE PROPERTY OF THE ROCKWELL AUTOMATION AND MAY NOT BE COPIED, USED OR DISCLOSED FOR ANY PURPOSE EXCEPT AS AUTHORIZED IN WRITING BY THE ROCKWELL AUTOMATION		PROJ Eng. DATE STI 05-27-08	DR. DATE		POWERFLEX 700AFE	
05				NO.			Mech Eng. DATE	CK. DATE Fr/Ru 05-27-08		TITLE: CIRCUIT CONTROL WIRING SCHEMATIC 20YD460A0ANNANA0 (FI10 IP21 400-500V) 20YF325A0ANNANA0 (FI10 IP21 600-690V)	
04				NO.							
03				NO.	CAD DIRECTORY:		APPD. BY DATE QJ 05-27-08	APPD. DATE			
02		QJ	06-16-2008	NO. 1033004							
01	QJ	Fr	04-04-2008	NO. 1032302	CAD FILE NAME:		LOCATION DIERIKON	INDEX NO.	ACAD UNIT NO.	DWG. NO. 379188-2	DWG. SIZE SH 9 OF 16
REV.	BY	CK.	DATE	AUTH. NO. OR ECN NO.							

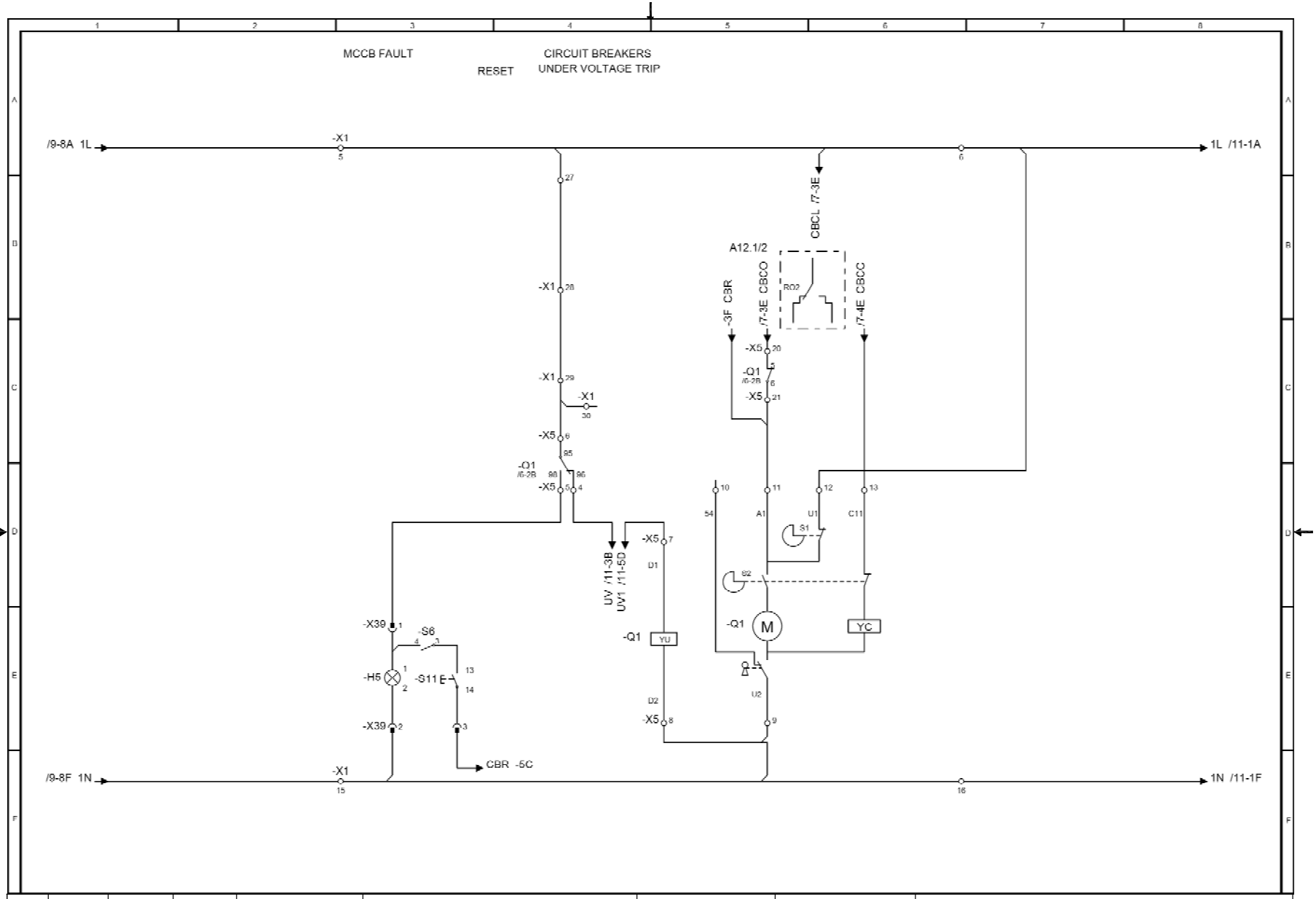

06				NO.	THIS DRAWING IS THE PROPERTY OF THE ROCKWELL AUTOMATION AND MAY NOT BE COPIED, USED OR DISCLOSED FOR ANY PURPOSE EXCEPT AS AUTHORIZED IN WRITING BY THE ROCKWELL AUTOMATION	PROJ Eng. DATE STI 05-27-08	DR. DATE	POWERFLEX 700AFE			
05				NO.		Mech Eng. DATE	CK. DATE Fr/Ru 05-27-08	TITLE: CIRCUIT CONTROL WIRING SCHEMATIC 20YD460A0ANNANA0 (FI10 IP21 400-500V) 20YF325A0ANNANA0 (FI10 IP21 600-690V)			
04				NO.							
03				NO.	CAD DIRECTORY:	APPD. BY DATE QJ 05.27.08	APPD. DATE				
02		QJ	06-16-2008	NO. 1033004							
01	QJ	Fr	04-04-2008	NO. 1032302	CAD FILE NAME:	LOCATION DIERIKON	INDEX NO.	ACAD UNIT NO.	DWG. NO. 379188-2	DWG. SIZE	SH 10 OF 16
REV.	BY	CK.	DATE	AUTH. NO. OR ECN NO.							

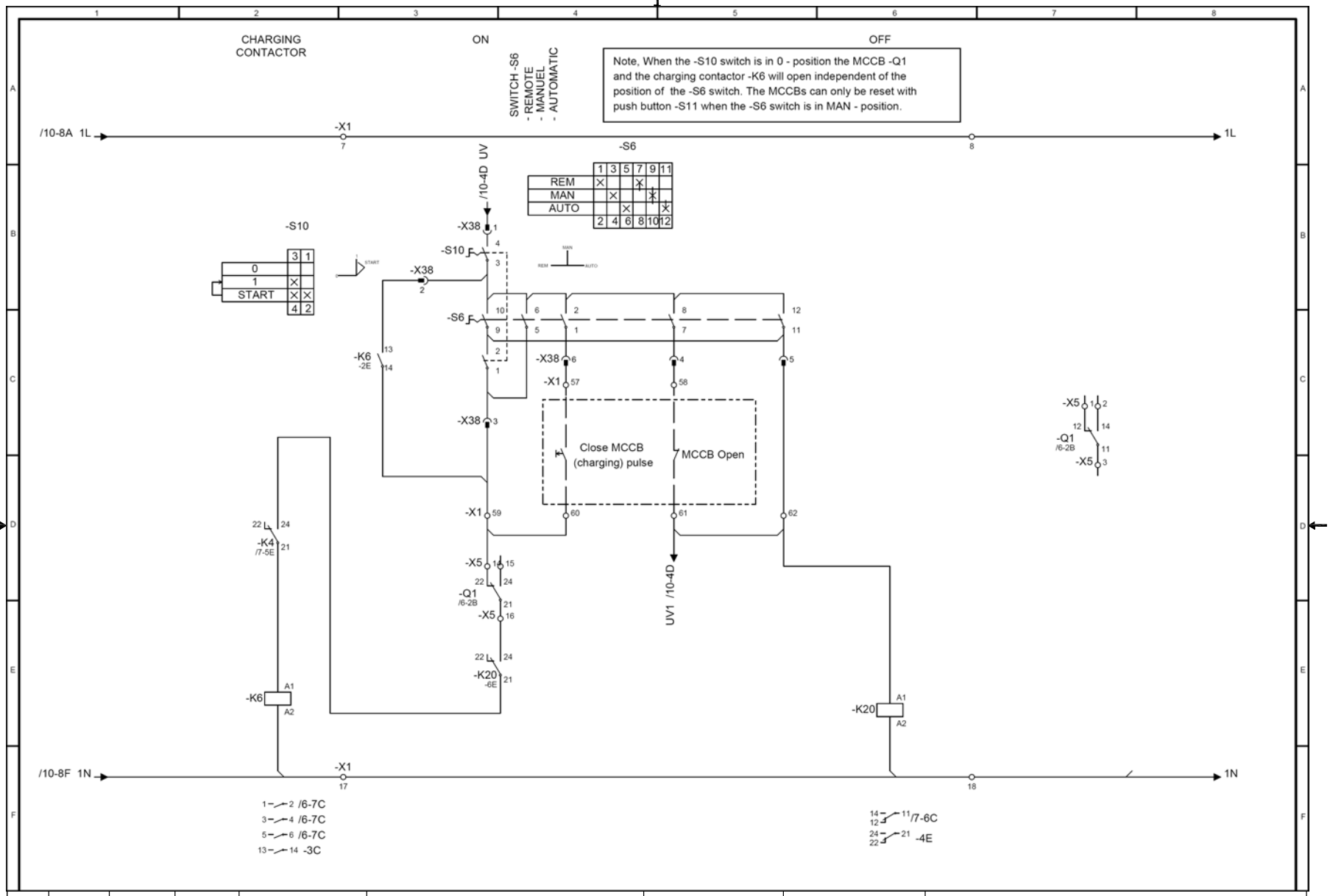

06				NO.	THIS DRAWING IS THE PROPERTY OF THE ROCKWELL AUTOMATION AND MAY NOT BE COPIED, USED OR DISCLOSED FOR ANY PURPOSE EXCEPT AS AUTHORIZED IN WRITING BY THE ROCKWELL AUTOMATION	PROJ Eng. DATE STI 05-27-08	DR. DATE	POWERFLEX 700AFE			
05				NO.		Mech Eng. DATE	CK. DATE Fr/Ru 05-27-08	TITLE: CIRCUIT CONTROL WIRING SCHEMATIC 20YD460A0ANNANA0 (FI10 IP21 400-500V) 20YF325A0ANNANA0 (FI10 IP21 600-690V)			
04				NO.							
03				NO.	CAD DIRECTORY:	APPD. BY DATE QJ 05-27-08	APPD. DATE				
02		QJ	06-16-2008	NO. 1033004							
01	QJ	Fr	04-04-2008	NO. 1032302	CAD FILE NAME:	LOCATION DIERIKON	INDEX NO.	ACAD UNIT NO.	DWG. NO. 379188-2	DWG. SIZE	SH 11 OF 16
REV.	BY	CK.	DATE	AUTH. NO. OR ECN NO.							

=01-X5

	External target 2	External target 1	Wire design. Color	Wire design. ⌀		Wire design. Color	Wire design. ⌀	Internal target 1	Internal target 2
					1			=01-Q1:12	
					2			=01-Q1:14	
					3			=01-Q1:11	
/11-3B		=01-X38:1			4			=01-Q1:96	
/10-3E		=01-X39:1			5			=01-Q1:98	
/10-4C		=01-X1:29			6			=01-Q1:95	
/11-5D		=01-X1:61			7			=01-Q1:D1	
/10-3F		=01-X1:15	BU		8	BU		=01-Q1:D2	
					9	BU		=01-Q1:U2	
					10			=01-Q1:54	
/10-3E		=01-X39:3			11			=01-Q1:A1	
/10-6A		=01-X1:6			12			=01-Q1:U1	
/7-4D		=01-A12.1:23			13			=01-Q1:C11	
/11-3D		=01-X1:59			14			=01-Q1:22	
					15			=01-Q1:24	
/11-4E		=01-K20:24			16			=01-Q1:21	
					17			=01-Q1:32	
/7-6C	=01-X1:65	=01-K20:14			18			=01-Q1:34	
/7-6C	=01-K4:14	=01-A11:14			19			=01-Q1:31	
/7-3D		=01-A12.1:21			20			=01-Q1:5	
					21			=01-Q1:6	

WHEN CROSS-SECTION IS NOT SHOWN --> AWG16, 1.306 mm²

WHEN COLOR IS NOT SHOWN --> Bk

REV.	BY	CK.	DATE	AUTH. NO. OR ECN NO.
06				NO.
05				NO.
04				NO.
03				NO.
02		QJ	06-16-2008	NO. 1033004
01	QJ	Fr	04-04-2008	NO. 1032302

THIS DRAWING IS THE PROPERTY OF THE ROCKWELL AUTOMATION
AND MAY NOT BE COPIED, USED OR DISCLOSED FOR ANY PURPOSE EXCEPT AS AUTHORIZED IN WRITING BY THE ROCKWELL AUTOMATION

CAD DIRECTORY:

CAD FILE NAME:

PROJ Eng. STI
DATE 05-27-08

Mech Eng.
DATE

APPD. BY QJ
DATE 05-27-08

LOCATION DIERIKON

DR.
DATE

CK. Fr/Ru
DATE 05-27-08

APPD.
DATE

INDEX NO.

ACAD UNIT NO.

POWERFLEX 700AFE

TITLE: CIRCUIT CONTROL WIRING SCHEMATIC
20YD460A0ANNANA0 (FI10 IP21 400-500V)
20YF325A0ANNANA0 (FI10 IP21 600-690V)

DWG. NO. 379188-2

DWG. SIZE

SH 12
OF 16

=01-X1

External target 2	External target 1	Wire design. Color	Wire design. ∅	Terminal	Wire design. Color	Wire design. ∅	Internal target 1	Internal target 2
				1			=01-F3:2	
				2				
				3			=01-F10:1	
				4				
				5				
				6			=01-A12.1:22	=01-X5:12
				7				
				8				
				11	BU		=01-T4:02	
				12				
				13	BU		=01-T10:N	
				14				
				15	BU		=01-X5:8	=01-X39:2
				16				
				17			=01-K6:A2	
				18			=01-K20:A2	
				27				
				28				
				29			=01-X5:6	
				30				
				57			=01-X38:6	
				58			=01-X38:4	
/11-3C	=01-X5:14			59			=01-X38:3	=01-K6:14
				60				
				61			=01-X5:7	
/11-6E				62			=01-X38:5	=01-K20:A1
				63			=01-K20:14	
				64			=01-A11:12	
/7-7C	=01-X5:18			65			=01-L1:1	=01-A11:19
				66			=01-A12.1:26	

WHEN CROSS-SECTION IS NOT SHOWN --> AWG16, 1.306 mm²

WHEN COLOR IS NOT SHOWN --> Bk

REV.	BY	CK.	DATE	AUTH. NO. OR ECN NO.
06				NO.
05				NO.
04				NO.
03				NO.
02		QJ	06-16-2008	NO. 1033004
01	QJ	Fr	04-04-2008	NO. 1032302

THIS DRAWING IS THE PROPERTY OF THE ROCKWELL AUTOMATION
AND MAY NOT BE COPIED, USED OR DISCLOSED FOR ANY PURPOSE EXCEPT AS AUTHORIZED IN WRITING BY THE ROCKWELL AUTOMATION

CAD DIRECTORY:

CAD FILE NAME:

PROJ Eng. STI
DATE 05-27-08
Mech Eng.
DATE
APPD. BY QJ
DATE 05-27-08
LOCATION DIERIKON

DR.
DATE
CK. Fr/Ru
DATE 05-27-08
APPD.
DATE
INDEX NO.
ACAD UNIT NO.

POWERFLEX 700AFE

TITLE: CIRCUIT CONTROL WIRING SCHEMATIC
20YD460A0ANNANA0 (FI10 IP21 400-500V)
20YF325A0ANNANA0 (FI10 IP21 600-690V)

DWG. NO. 379188-2
DWG. SIZE
SH 13
OF 16

=01-X3

External target 2	External target 1	Wire design. Color	Wire design. ⌀			Wire design. Color	Wire design. ⌀	Internal target 1	Internal target 2
/8-1B	=01-Q4:6				400			=01-T4:400	
					440			=01-T4:440	
					460			=01-T4:460	
					480			=01-T4:480	
					500			=01-T4:500	

WHEN CROSS-SECTION IS NOT SHOWN --> AWG16, 1.306 mm²

WHEN COLOR IS NOT SHOWN --> Bk

REV.	BY	CK.	DATE	AUTH. NO. OR ECN NO.
06				NO.
05				NO.
04				NO.
03				NO.
02		QJ	06-16-2008	NO. 1033004
01	QJ	Fr	04-04-2008	NO. 1032302

THIS DRAWING IS THE PROPERTY OF THE ROCKWELL AUTOMATION
AND MAY NOT BE COPIED, USED OR DISCLOSED FOR ANY PURPOSE EXCEPT AS AUTHORIZED IN WRITING BY THE ROCKWELL AUTOMATION

CAD DIRECTORY:

CAD FILE NAME:

PROJ Eng. STI
DATE 05-27-08

Mech Eng.
DATE

APPD. BY QJ
DATE 05-27-08

LOCATION DIERIKON

DR.
DATE

CK. Fr/Ru
DATE 05-27-08

APPD.
DATE

INDEX NO.

ACAD UNIT NO.

POWERFLEX 700AFE

TITLE: CIRCUIT CONTROL WIRING SCHEMATIC
20YD460A0ANNANA0 (FI10 IP21 400-500V)
20YF325A0ANNANA0 (FI10 IP21 600-690V)

DWG. NO. 379188-2

DWG. SIZE

SH 14
OF 16

=01-X6

External target 2	External target 1	Wire design. Color	Wire design. ⌀			Wire design. Color	Wire design. ⌀	Internal target 1	Internal target 2
/6-7F	=01:B+				+		2,63	=01-R6.1:2	
/6-7F	=01:B-				-		2,63	=01-R6.2:2	

WHEN CROSS-SECTION IS NOT SHOWN --> AWG16, 1.306 mm²
WHEN COLOR IS NOT SHOWN --> Bk

REV.	BY	CK.	DATE	AUTH. NO. OR ECN NO.
06				NO.
05				NO.
04				NO.
03				NO.
02		QJ	06-16-2008	NO. 1033004
01	QJ	Fr	04-04-2008	NO. 1032302

THIS DRAWING IS THE PROPERTY OF THE ROCKWELL AUTOMATION
AND MAY NOT BE COPIED, USED OR DISCLOSED FOR ANY PURPOSE EXCEPT AS AUTHORIZED IN WRITING BY THE ROCKWELL AUTOMATION

CAD DIRECTORY:
CAD FILE NAME:

PROJ Eng. STI DATE 05-27-08
Mech Eng. DATE
APPD. BY QJ DATE 05-27-08
LOCATION DIERIKON

DR. DATE
CK. Fr/Ru DATE 05-27-08
APPD. DATE
INDEX NO.
ACAD UNIT NO.

POWERFLEX 700AFE

TITLE: CIRCUIT CONTROL WIRING SCHEMATIC
20YD460A0ANNANA0 (FI10 IP21 400-500V)
20YF325A0ANNANA0 (FI10 IP21 600-690V)

DWG. NO. 379188-2
DWG. SIZE
SH 15
OF 16

Wiring list

Wire designation	Source	Target	Color	⌀
	=01-A11:11	=01-K4:14		
	=01-A11:13	=01-K20:11		
	=01-A11:18	=01-X39:5		
	=01-A11:20	=01-K4:A2		
	=01-A11:20	=01-A11:18		
	=01-A1.1:	=01:PE	GNYE	
	=01-A12.1:25	=01-A11:19		
	=01:PE	=01-T4:02	GNYE	
AWG13 (D. INS.)	=01:B+	=01-F11:3		2,63
AWG13 (D. INS.)	=01:B-	=01-F11:1		2,63
	=01-F3:1	=01-T4:230		
AWG13 (D. INS.)	=01-F6:1	=01:L1		2,63
AWG13 (D. INS.)	=01-F6:3	=01:L2		2,63
AWG13 (D. INS.)	=01-F6:5	=01:L3		2,63
	=01-F10:2	=01-T10:L		
	=01-H5:1	=01-X39:1		
	=01-H5:1	=01-S6:4		
	=01-H3.1:1	=01-X39:4		
	=01-K4:24	=01-K20:21		
	=01-K4:A1	=01-A12.1:24		
AWG13	=01-K6:1	=01-Q5:2		2,63
AWG13	=01-K6:3	=01-Q5:4		2,63
AWG13	=01-K6:5	=01-Q5:6		2,63
	=01-K6:13	=01-X38:2		
	=01-K6:A1	=01-K4:21		
AWG13 (D. INS.)	=01-L1:+	=01-F11:2		2,63
	=01-L1:4	=01-A11:15		
AWG13 (D. INS.)	=01-L1:-	=01-F11:4		2,63
AWG13 (D. INS.)	=01-Q4:1	=01-F6:2		2,63
AWG13 (D. INS.)	=01-Q4:3	=01-F6:4		2,63
	=01-Q4:4	=01-Q4:5		
AWG13 (D. INS.)	=01-Q5:1	=01-F6:2		2,63
AWG13 (D. INS.)	=01-Q5:3	=01-F6:4		2,63

Wire designation	Source	Target	Color	⌀
AWG13 (D. INS.)	=01-Q5:5	=01-F6:6		2,63
AWG13	=01-R6.1:1	=01-V6:+		2,63
AWG13	=01-R6.2:1	=01-V6:-		2,63
	=01-S6:6	=01-S6:10		
	=01-S6:6	=01-S6:2		
	=01-S6:8	=01-S6:2		
	=01-S6:9	=01-S6:11		
	=01-S6:10	=01-S10:3		
	=01-S6:12	=01-S6:8		
	=01-S10:1	=01-S6:5		
	=01-S10:2	=01-S6:9		
	=01-S10:4	=01-X38:1		
	=01-S11:13	=01-S6:3		
	=01-T4:01	=01-Q4:2		
	=01-T10:+	=01-A16.1:1	RD	
	=01-T10:PE	=01-E31:PE	GNYE	
	=01-T10:-	=01-A16.1:2	BN	
	=01-U1:2	=01-L1:3		
	=01-U1:1	=01-L1:4		
	=01-U1:3	=01-L1:1		
AWG13	=01-V6:L3	=01-K6:6		2,63
AWG13	=01-V6:L2	=01-K6:4		2,63
AWG13	=01-V6:L1	=01-K6:2		2,63
	=01-X38:2	=01-S10:3		
	=01-X38:3	=01-S10:1		
	=01-X38:4	=01-S6:7		
	=01-X38:5	=01-S6:11		
	=01-X38:6	=01-S6:1		
	=01-X39:2	=01-H5:2		
	=01-X39:3	=01-S11:14		
	=01-X39:4	=01-K4:11		
	=01-X39:5	=01-H3.1:2		

WHEN CROSS-SECTION IS NOT SHOWN --> AWG16, 1.306 mm²
WHEN COLOR IS NOT SHOWN --> Bk

REV.	BY	CK.	DATE	AUTH. NO. OR ECN NO.
06				NO.
05				NO.
04				NO.
03				NO.
02		QJ	06-16-2008	NO. 1033004
01	QJ	Fr	04-04-2008	NO. 1032302

THIS DRAWING IS THE PROPERTY OF THE ROCKWELL AUTOMATION
AND MAY NOT BE COPIED, USED OR DISCLOSED FOR ANY PURPOSE EXCEPT AS AUTHORIZED IN WRITING BY THE ROCKWELL AUTOMATION

CAD DIRECTORY:
CAD FILE NAME:

PROJ Eng. STI
DATE 05-27-08
Mech Eng.
DATE
APPD. BY QJ
DATE 05-27-08
LOCATION DIERIKON

DR.
DATE
CK. Fr/Ru
DATE 05-27-08
APPD.
DATE
INDEX NO.
ACAD UNIT NO.

POWERFLEX 700AFE

TITLE: CIRCUIT CONTROL WIRING SCHEMATIC
20YD460A0ANNANA0 (FI10 IP21 400-500V)
20YF325A0ANNANA0 (FI10 IP21 600-690V)

DWG. NO. **379188-2**
DWG. SIZE
SH 16
OF 16