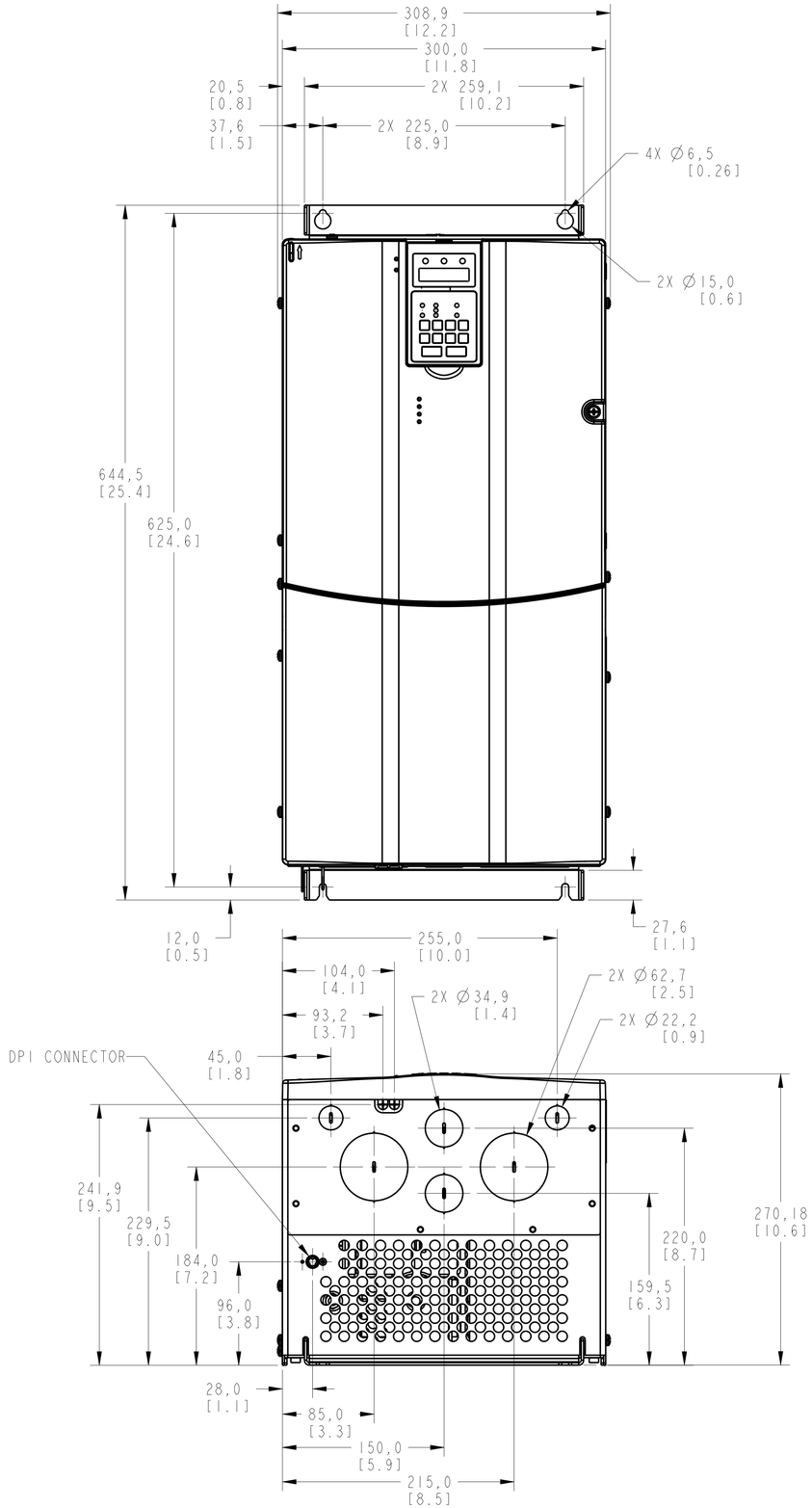

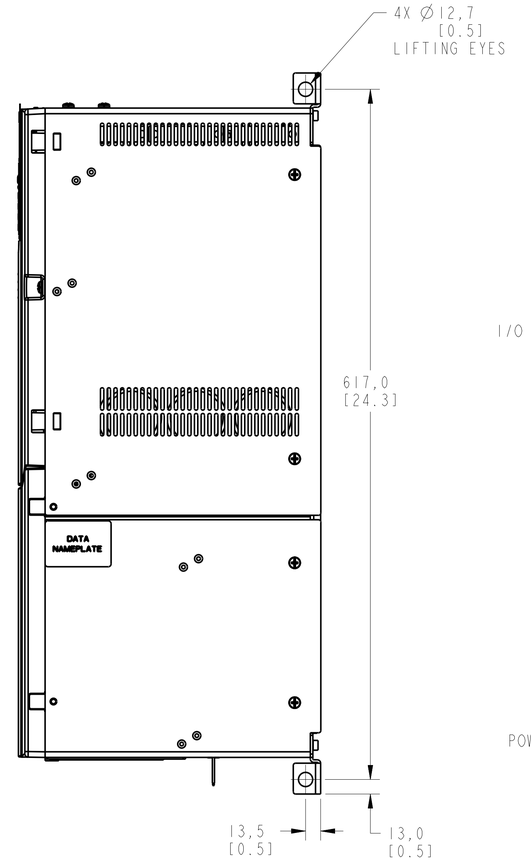

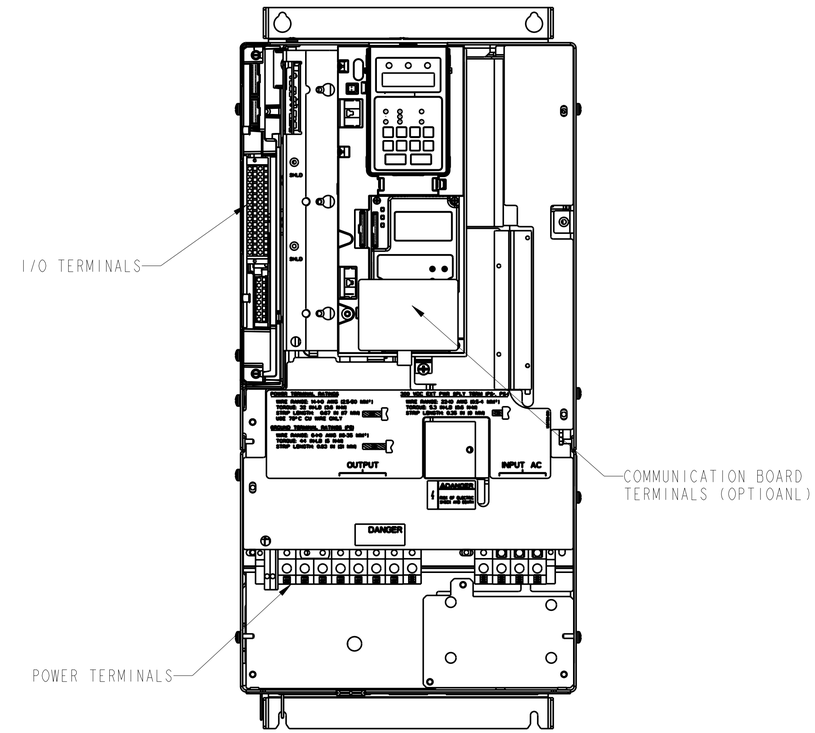

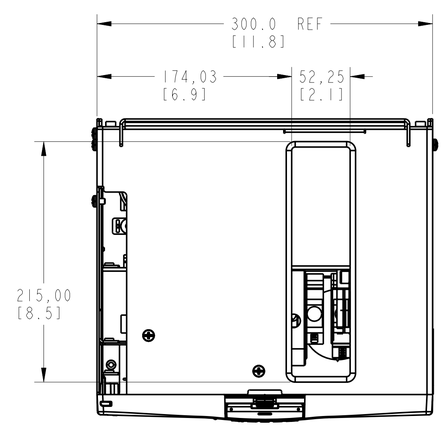

TOP VIEW

Rockwell Automation

CONFIDENTIAL AND PROPRIETARY INFORMATION
THIS DOCUMENT CONTAINS CONFIDENTIAL AND PROPRIETARY INFORMATION OF ROCKWELL AUTOMATION, INC. AND MAY NOT BE USED, COPIED OR DISCLOSED TO OTHERS, EXCEPT WITH THE AUTHORIZED WRITTEN PERMISSION OF ROCKWELL AUTOMATION, INC.

PF700 FRAME 5
GEN III

Sheet 1 Of 1

Drawn by: IGUREVII | Date: 02-28-11

Size		Ver
D	198680-6	03