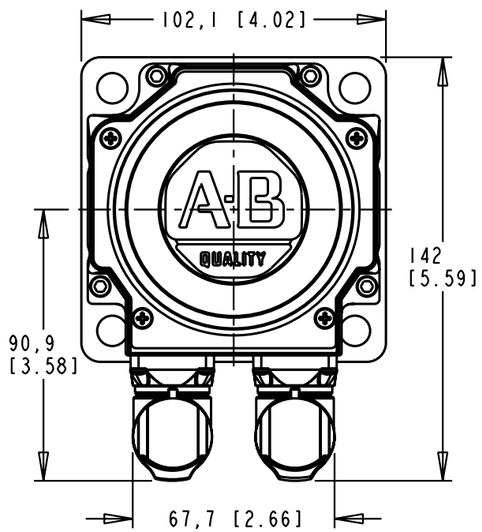


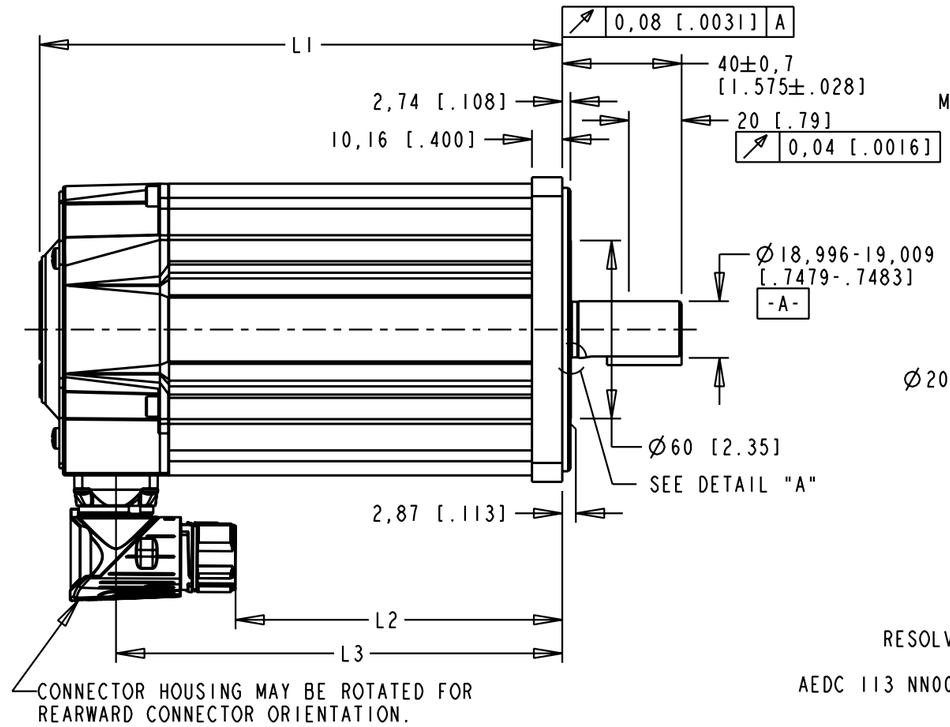


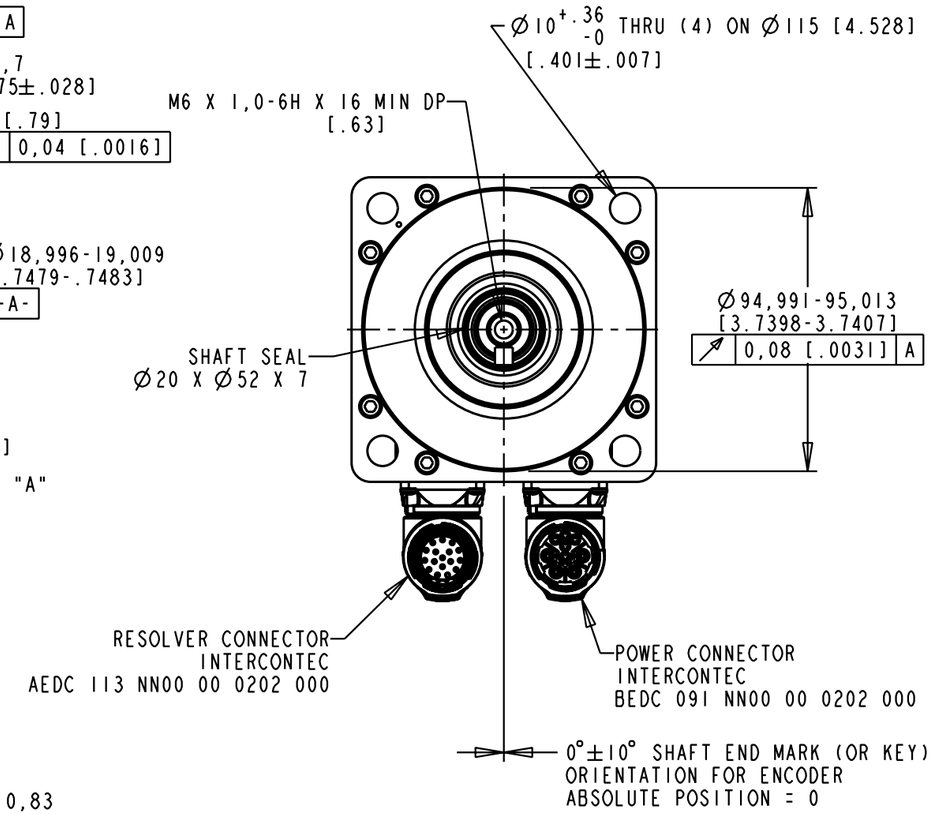


| MODEL | L1 | L2 | L3 |
|---|---|---|---|
| 430 | 175 [6.90] | 110 [4.31] | 149 [5.89] |

| PIN-OUT POWER CONNECTOR | |
|---|---|
| PIN | FUNCTION |
| A | U |
| B | V |
| C | W |
| D | GND |
| E-H | - |
| L | - |

| PIN-OUT ENCODER CONNECTOR | |
|---|---|
| PIN | FUNCTION |
| 1 | SIN + |
| 2 | SIN - |
| 3 | COS + |
| 4 | COS - |
| 5 | DATA + |
| 6 | DATA - |
| 7-8 | - |
| 9 | EPWR 5V |
| 10 | ECOM |
| 11-12 | - |
| 13 | TS + |
| 14 | TS - |
| 15-17 | - |

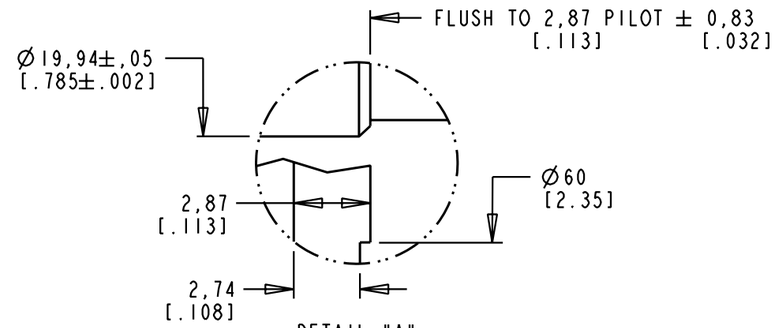


DETAIL "A"

SHAFT KEY

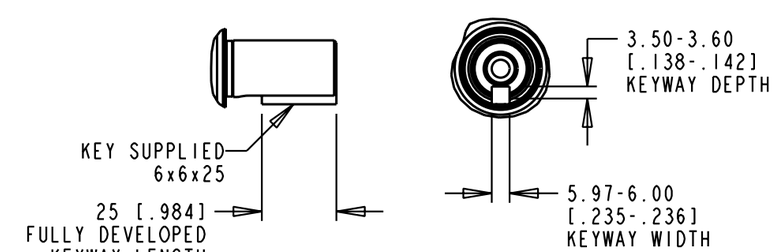


NOTE:

1. MODEL SHOWN IS MPF-x430x-xJ72BA.
2. 3D STEP (.stp) FILES AVAILABLE AT ALL LENGTHS.
3. COVERS SINGLE AND MULTI-TURN ABSOLUTE ENCODER 230V MODELS (i.e., MPF-A4xxx-MJ72BA and MPF-A4xxx-SJ72BA).

| REFERENCES | |
|---|---|
| VERSION/ CHANGE NUMBER | |
| 00 | 10005711 |

UNLESS OTHERWISE SPECIFIED
DO NOT SCALE DRAWING
DIMENSIONS ARE IN MILLIMETERS WITH INCHES REFERENCED [X]
UNTOLERANCED DIMENSIONS ARE REFERENCE
3RD ANGLE PROJECTION

DESCRIPTION
MPF-A4xxx-xJ72BA, ESM

CAD DOCUMENT

Rockwell Automation

Allen-Bradley

DR. D. HECKSEL | DATE 05/23/08 | SHEET 1 OF 1

DXF 2D OR STEP 3D FILE AVAILABLE

DWG. SIZE B

DOCUMENT NUMBER 10000020826