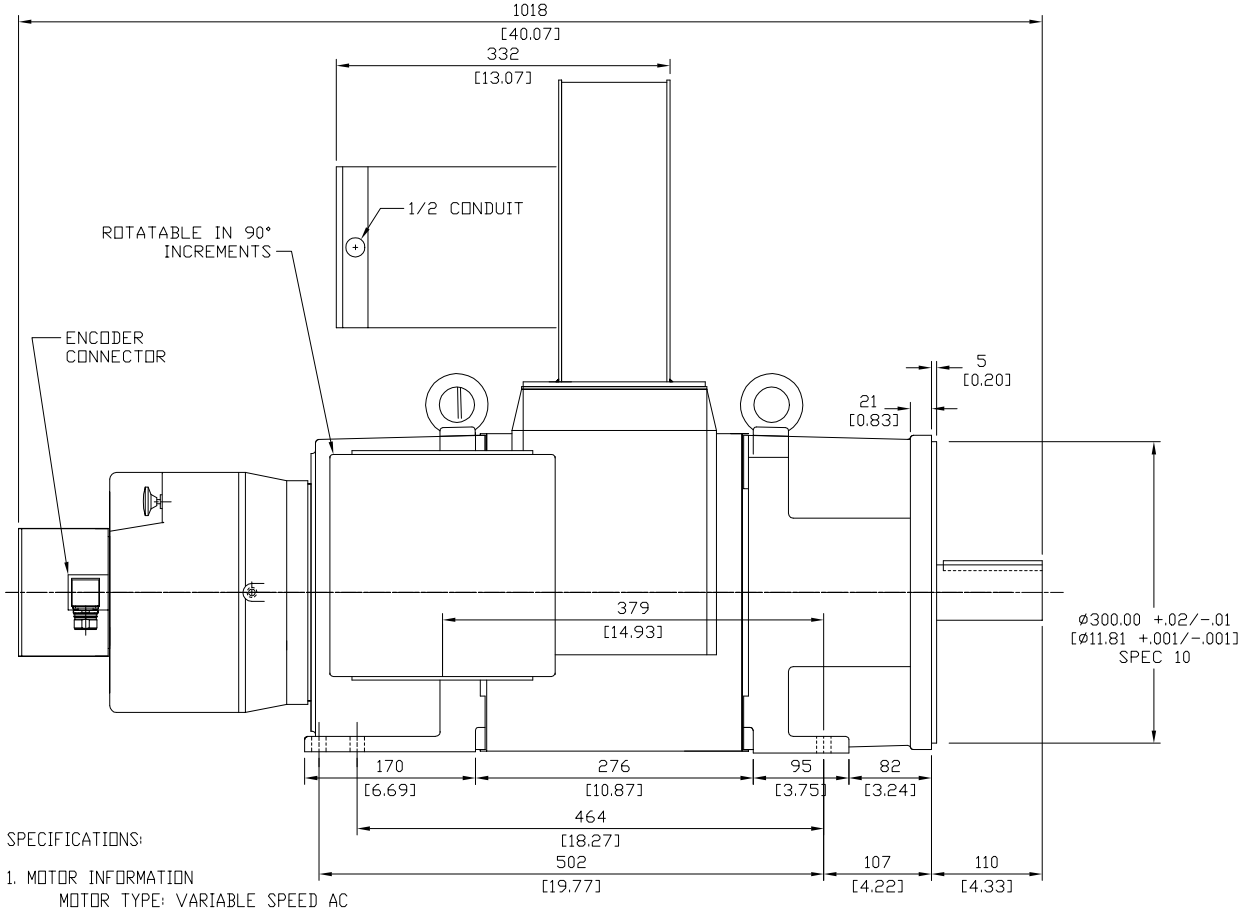

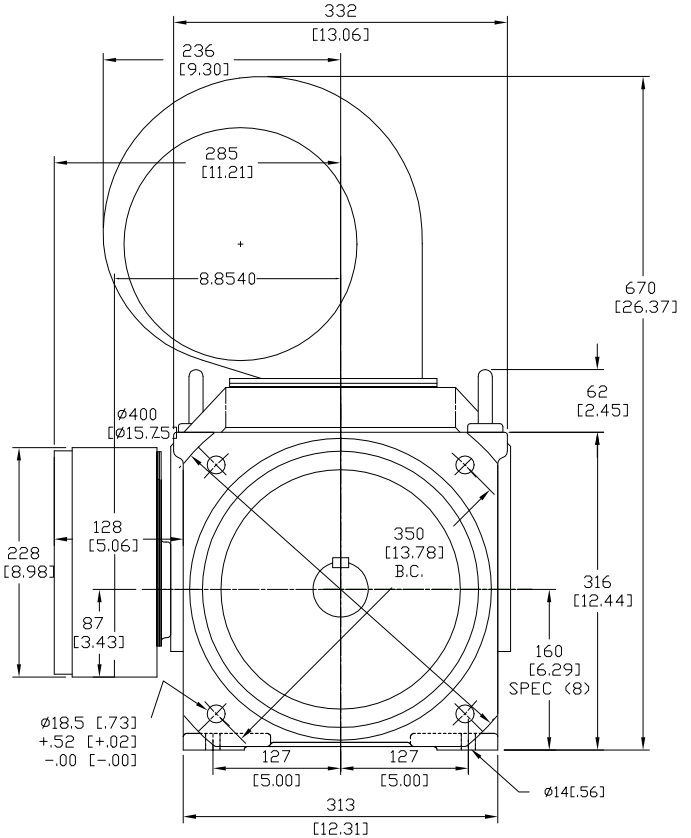

SPECIFICATIONS:

1. MOTOR INFORMATION
   MOTOR TYPE: VARIABLE SPEED AC
   FRAME SIZE: RDL1611Y
   RATING: 57 KW
   VOLTAGE: 400
   ENCLOSURE: TOTALLY ENCLOSED IP54
   MOUNTING: FLANGE (350mm BOLT CIRCLE)
   COOLING: BLOWER COOLED IC416
   DRIVE METHOD: COUPLED OR BELTED
   ACCESSORIES: ENCODER & BRAKE
2. CONTINUOUS STALL TORQUE: 183 Nm
   MAX AT 155°C WINDING TEMPERATURE, IN A 40°C AMBIENT
3. OPERATING SPEED: 3000 BASE SPEED / 5000 RPM MAX.
4. 1024 SINUSOID/REV ENCODER, WITH MULTI-TURN ABSOLUTE POSTION DATA
5. FOR ADDITIONAL SPECIFICATIONS SEE 10000000342
6. SHAFT HEIGHT WILL NOT BE EXCEEDED SHIMS UP TO 0.5 MM IN THICKNESS USUALLY REQUIRED FOR COUPLED OR GEARED MACHINES.
7. SHAFT EXTENSIONS ARE ACCORDING TO DIN 748, TOLERANCES ARE BASED ON THE ISA FITTING SYSTEM USING k6 FOR DIAMETERS UP TO 50MM AND m6 FOR DIAMETERS ABOVE.
8. MAX SHAFT TIR .06 [.002]
   MAX FACE TIR .13 [.005]
9. MOTOR WEIGHT 270 KG. [595 LBS] (MAY VARY 15%)
10. BRAKE: 400VAC 20 Nm MAX. HOLDING TORQUE, BRAKE RELEASES WHEN VOLTAGE APPLIED

BLOWER CONNECTION		
SERIES		
LEAD	400 VOLTS	
T1	L1	
T2	L2	
T3	L3	
T4		
T5		
T6		
T7		
T8		
T9		
PARALLEL		
LEAD	200 VOLTS	
T1	L1	
T2	L2	
T3	L3	
T4		
T5		
T6		
T7		
T8		
T9		

PIN-OUT	
ENCODER CONNECTOR	
PIN	FUNCTION
A	SIN +
B	SIN -
C	COS +
D	COS -
E	DATA +
F	DATA -
G-M	-
N	+9 VDC
P	COM
R	TS +
S	TS -
T-V	-

MOTOR CONNECTION	
TERMINAL BOX	
LEAD	SOURCE
U1	L1
V1	L2
W1	L3
GREEN	GROUND

BRAKE CONNECTION	
460 V 1 PHASE	
LEAD	SOURCE
B1	L1
B2	L2

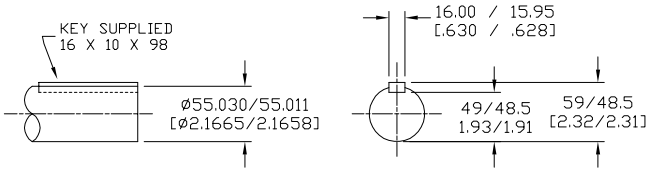

DRIVE END
SHAFT DETAIL
SPEC (9)

SUPPLIER PART NUMBER: L16M5279

NOTE: ALL DRAWING MODIFICATIONS REQUIRE CUSTOMER APPROVAL

REFERENCES		DESCRIPTION	CAD DOCUMENT
VERSION/ CHANGE NUMBER	TOLERANCES UNLESS OTHERWISE SPECIFIED DO NOT SCALE DRAWING DIMENSIONS ARE IN MILLIMETERS WITH INCHES REFERENCED [X] UNTOLERANCED DIMENSIONS ARE REFERENCETHIRD ANGLE PROJECTION	HPK-E1611E-MB44AA,ESM	Allen-Bradley Rockwell Automation
		DR. AMB / DATE 09-19-06	SHEET 1 OF 1
		DXF FILE AVAILABLE	DWG. SIZE B / DOCUMENT NUMBER 10000000362