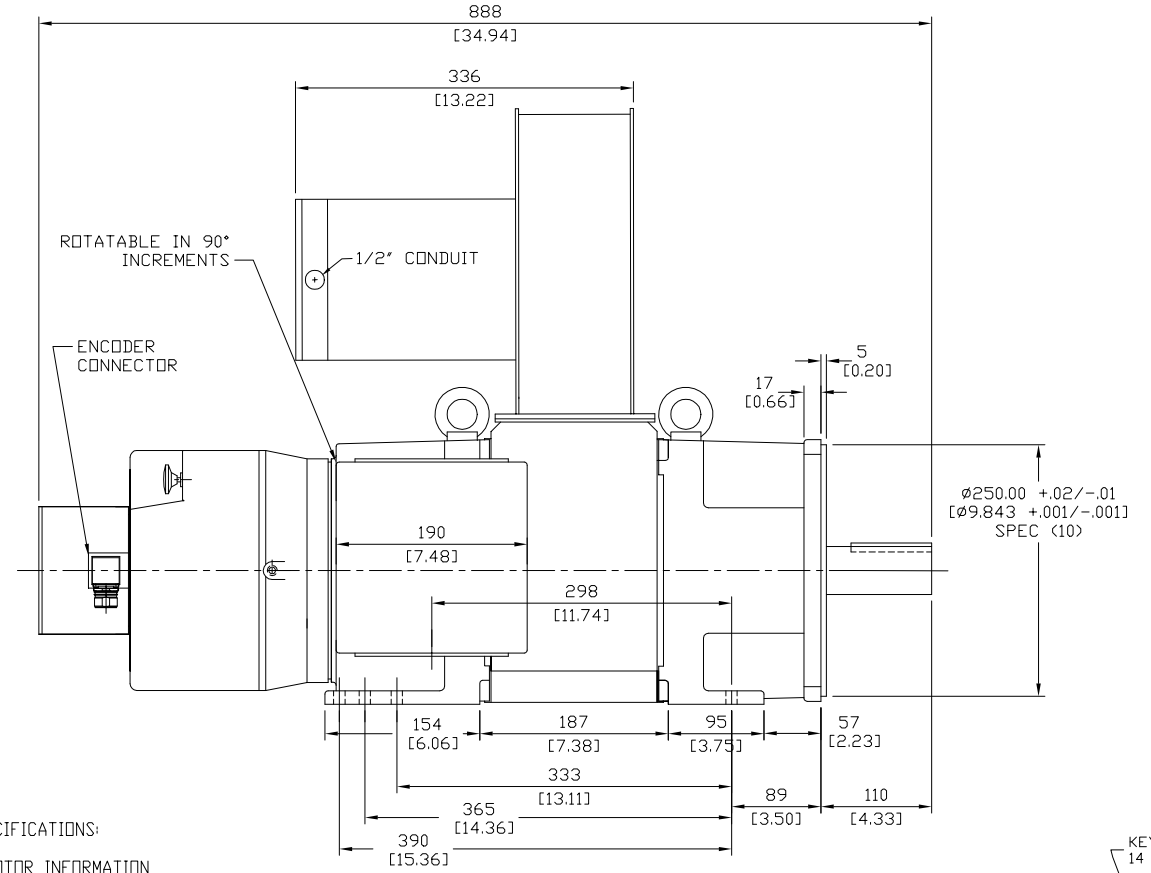


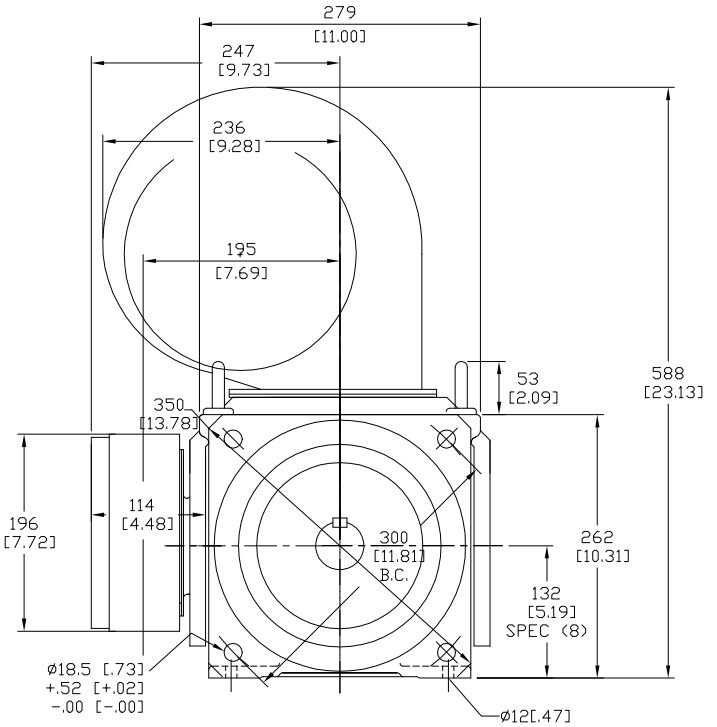


SPECIFICATIONS:

1. MOTOR INFORMATION
   MOTOR TYPE: VARIABLE SPEED AC
   FRAME SIZE: RDL1307Y
   RATING: 17.1 KW
   VOLTAGE: 400
   ENCLOSURE: TOTALLY ENCLOSED IP54
   MOUNTING: FLANGE (350mm BOLT CIRCLE)
   COOLING: BLOWER COOLED IC416
   DRIVE METHOD: COUPLED OR BELTED
   ACCESSORIES: ENCODER & BRAKE
2. CONTINUOUS STALL TORQUE: 112 Nm
   MAX AT 155°C WINDING TEMPERATURE, IN A 40°C AMBIENT
3. OPERATING SPEED: 1500 BASE SPEED / 3000 RPM MAX.
4. 1024 SINUSOID/REV ENCODER, WITH MULTI-TURN ABSOLUTE POSTION DATA
5. FOR ADDITIONAL SPECIFICATIONS SEE 10000000326
6. SHAFT HEIGHT WILL NOT BE EXCEEDED SHIMS UP TO 0.5 MM IN THICKNESS USUALLY REQUIRED FOR COUPLED OR GEARED MACHINES.
7. SHAFT EXTENSIONS ARE ACCORDING TO DIN 748, TOLERANCES ARE BASED ON THE ISA FITTING SYSTEM USING k6 FOR DIAMETERS UP TO 50MM AND m6 FOR DIAMETERS ABOVE.
8. MAX SHAFT TIR .06 [.002]
   MAX FACE TIR .13 [.005]
9. MOTOR WEIGHT 193 KG. [426 LBS] (MAY VARY 15%)
10. BRAKE: 400VAC 20 Nm MAX. HOLDING TORQUE, BRAKE RELEASES WHEN VOLTAGE APPLIED

| BLOWER CONNECTION | |
|---|---|
| SERIES | |
| LEAD | 400 VOLTS |
| T1 | L1 |
| T2 | L2 |
| T3 | L3 |
| T4 | |
| T5 | |
| T6 | |
| T7 | |
| T8 | |
| T9 | |
| PARALLEL | |
| LEAD | 200 VOLTS |
| T1 | L1 |
| T2 | L2 |
| T3 | L3 |
| T4 | |
| T5 | |
| T6 | |
| T7 | |
| T8 | |
| T9 | |

| PIN-OUT | |
|---|---|
| ENCODER CONNECTOR | |
| PIN | FUNCTION |
| A | SIN + |
| B | SIN - |
| C | COS + |
| D | COS - |
| E | DATA + |
| F | DATA - |
| G-M | - |
| N | +9 VDC |
| P | COM |
| R | TS + |
| S | TS - |
| T-V | - |

| MOTOR CONNECTION | |
|---|---|
| TERMINAL BOX | |
| LEAD | SOURCE |
| U1 | L1 |
| V1 | L2 |
| W1 | L3 |
| GREEN | GROUND |

| BRAKE CONNECTION | |
|---|---|
| 460 V 1 PHASE | |
| LEAD | SOURCE |
| B1 | L1 |
| B2 | L2 |

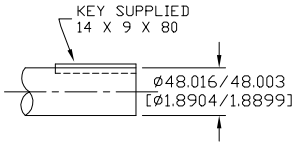


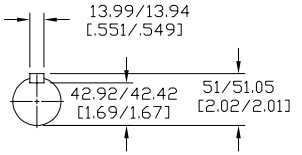


DRIVE END
SHAFT DETAIL
SPEC (9)

SUPPLIER PART NUMBER: L13M5270

NOTE: ALL DRAWING MODIFICATIONS REQUIRE CUSTOMER APPROVAL

| REFERENCES | | | DESCRIPTION | CAD DOCUMENT |
|---|---|---|---|---|
| VERSION/ CHANGE NUMBER | TOLERANCES UNLESS OTHERWISE SPECIFIED<br>DO NOT SCALE DRAWING<br>DIMENSIONS ARE IN MILLIMETERS WITH INCHES REFERENCED [X]<br>UNTOLERANCED DIMENSIONS ARE REFERENCETHIRD ANGLE PROJECTION | | HPK-E1307C-MB44AA,ESM | Allen-Bradley |
| | | | Rockwell Automation | |
| | | DR. AMB | DATE 09-19-06 | SHEET 1 OF 1 |
| | | DXF FILE AVAILABLE | | DWG. SIZE B / DOCUMENT NUMBER 10000000346 |