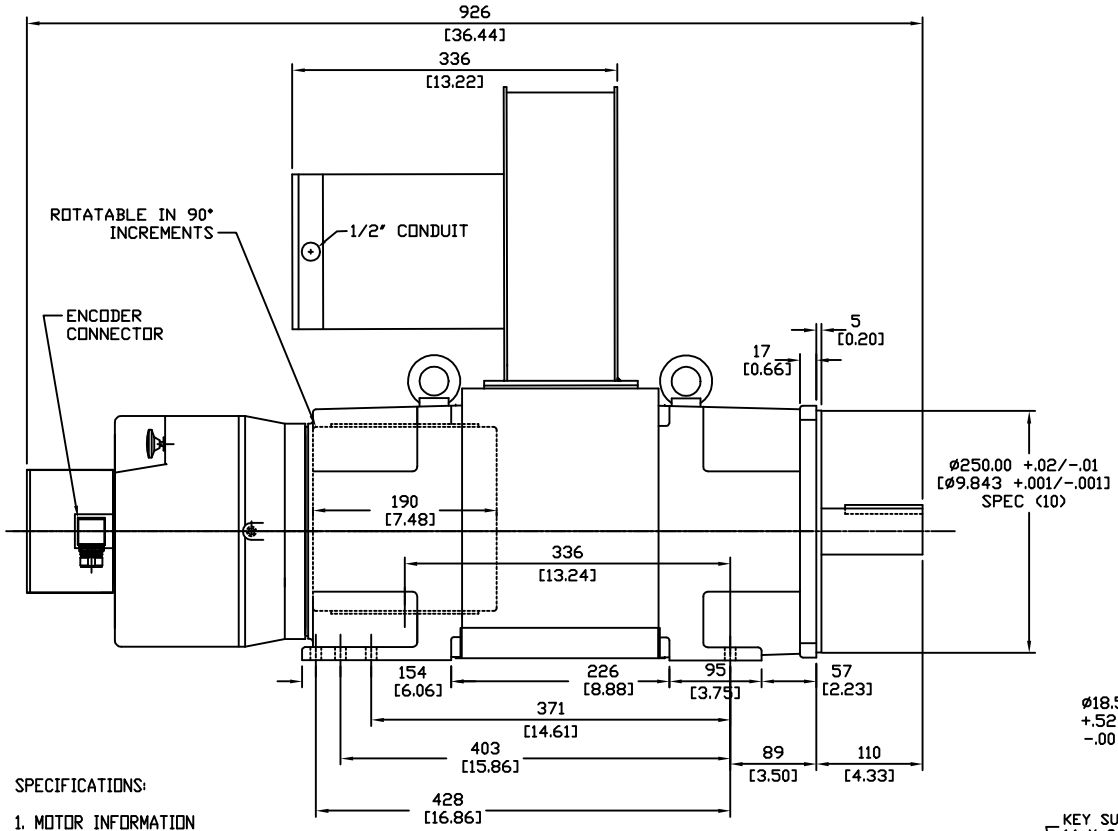


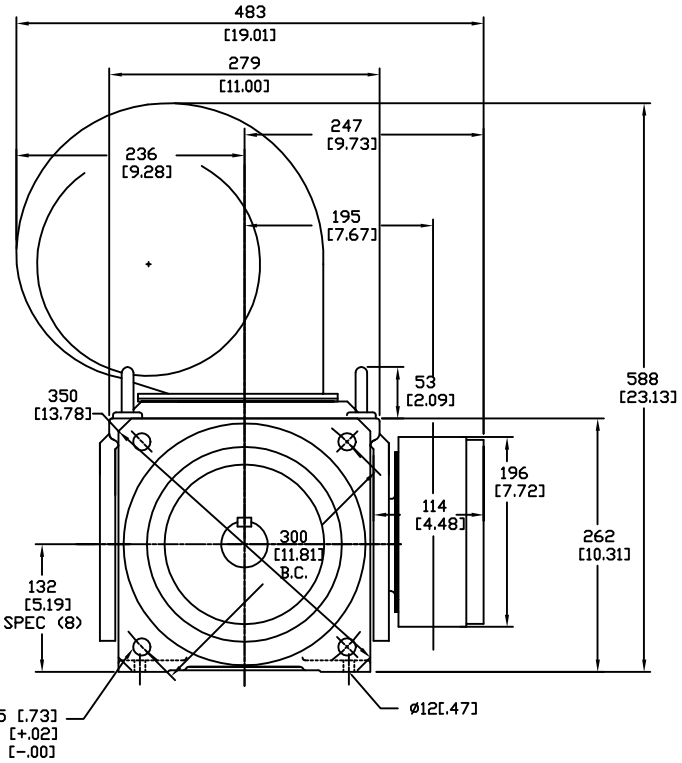


SPECIFICATIONS:

1. MOTOR INFORMATION
   MOTOR TYPE: VARIABLE SPEED AC
   FRAME SIZE: RDL1308Y
   RATING: 33.5 KW
   VOLTAGE: 460
   ENCLOSURE: TOTALLY ENCLOSED IP54
   MOUNTING: FLANGE (350mm BOLT CIRCLE)
   COOLING: BLOWER COOLED IC416
   DRIVE METHOD: COUPLED OR BELTED
   ACCESSORIES: ENCODER & BRAKE
2. CONTINUOUS STALL TORQUE: 239 Nm
   MAX AT 155°C WINDING TEMPERATURE, IN A 40°C AMBIENT
3. OPERATING SPEED: 3000 BASE SPEED / 5000 RPM MAX.
4. 1024 SINUSOID/REV ENCODER, WITH MULTI-TURN ABSOLUTE POSTION DATA
5. FOR ADDITIONAL SPECIFICATIONS SEE L13M5216ESE
6. SHAFT HEIGHT WILL NOT BE EXCEEDED SHIMS UP TO 0.5 MM IN THICKNESS USUALLY REQUIRED FOR COUPLED OR GEARED MACHINES.
7. SHAFT EXTENSIONS ARE ACCORDING TO DIN 748, TOLERANCES ARE BASED ON THE ISA FITTING SYSTEM USING k6 FOR DIAMETERS UP TO 50MM AND m6 FOR DIAMETERS ABOVE.
8. MAX SHAFT TIR .06 [.002]
   MAX FACE TIR .13 [.005]
9. MOTOR WEIGHT 204 KG. [500 LBS] (MAY VARY 15%)
10. BRAKE: 460VAC 20 Nm MAX. HOLDING TORQUE, BRAKE RELEASES WHEN VOLTAGE APPLIED

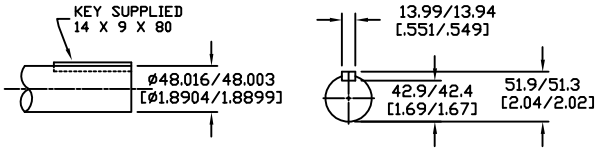


DRIVE END
SHAFT DETAIL
SPEC (9)

| BLOWER CONNECTION | |
|---|---|
| SERIES | |
| LEAD | 460 VOLTS |
| T1 | L1 |
| T2 | L2 |
| T3 | L3 |
| T4 | |
| T5 | |
| T6 | |
| T7 | |
| T8 | |
| T9 | |
| PARALLEL | |
| LEAD | 230 VOLTS |
| T1 | L1 |
| T2 | L2 |
| T3 | L3 |
| T4 | |
| T5 | |
| T6 | |
| T7 | |
| T8 | |
| T9 | |

| PIN-OUT | |
|---|---|
| ENCODER CONNECTOR | |
| PIN | FUNCTION |
| A | SIN + |
| B | SIN - |
| C | COS + |
| D | COS - |
| E | DATA + |
| F | DATA - |
| G-M | - |
| N | +9 VDC |
| P | COM |
| R | TS + |
| S | TS - |
| T-V | - |

| MOTOR CONNECTION | |
|---|---|
| TERMINAL BOX | |
| LEAD | SOURCE |
| U1 | L1 |
| V1 | L2 |
| W1 | L3 |
| GREEN | GROUND |

| BRAKE CONNECTION | |
|---|---|
| 460 V 1 PHASE | |
| LEAD | SOURCE |
| B1 | L1 |
| B2 | L2 |

NOTE: ALL DRAWING MODIFICATIONS REQUIRE CUSTOMER APPROVAL

| REV | C/R | REVISION DESCRIPTION | DATE | BY |
|---|---|---|---|---|
| | | | | |

UNLESS OTHERWISE SPECIFIED
DO NOT SCALE DRAWING
DIMENSIONS ARE IN MILLIMETERS
WITH INCHES REFERENCED [X.X]
UNTOLERANCED DIMENSIONS ARE REFERENCE
THIRD ANGLE PROJECTION

| DRAWN BY | DATE | APPROVED BY | DATE |
|---|---|---|---|
| GWS | 3/06/06 | WEM | 3/06/06 |

CATALOG NO. HPK-B1308E-MC44AA-ESM

Allen-Bradley

PART NO. L13M5216

SCALE : N/A | DWG SIZE C | SHEET 1 OF 1

DXF FILE AVAILABLE