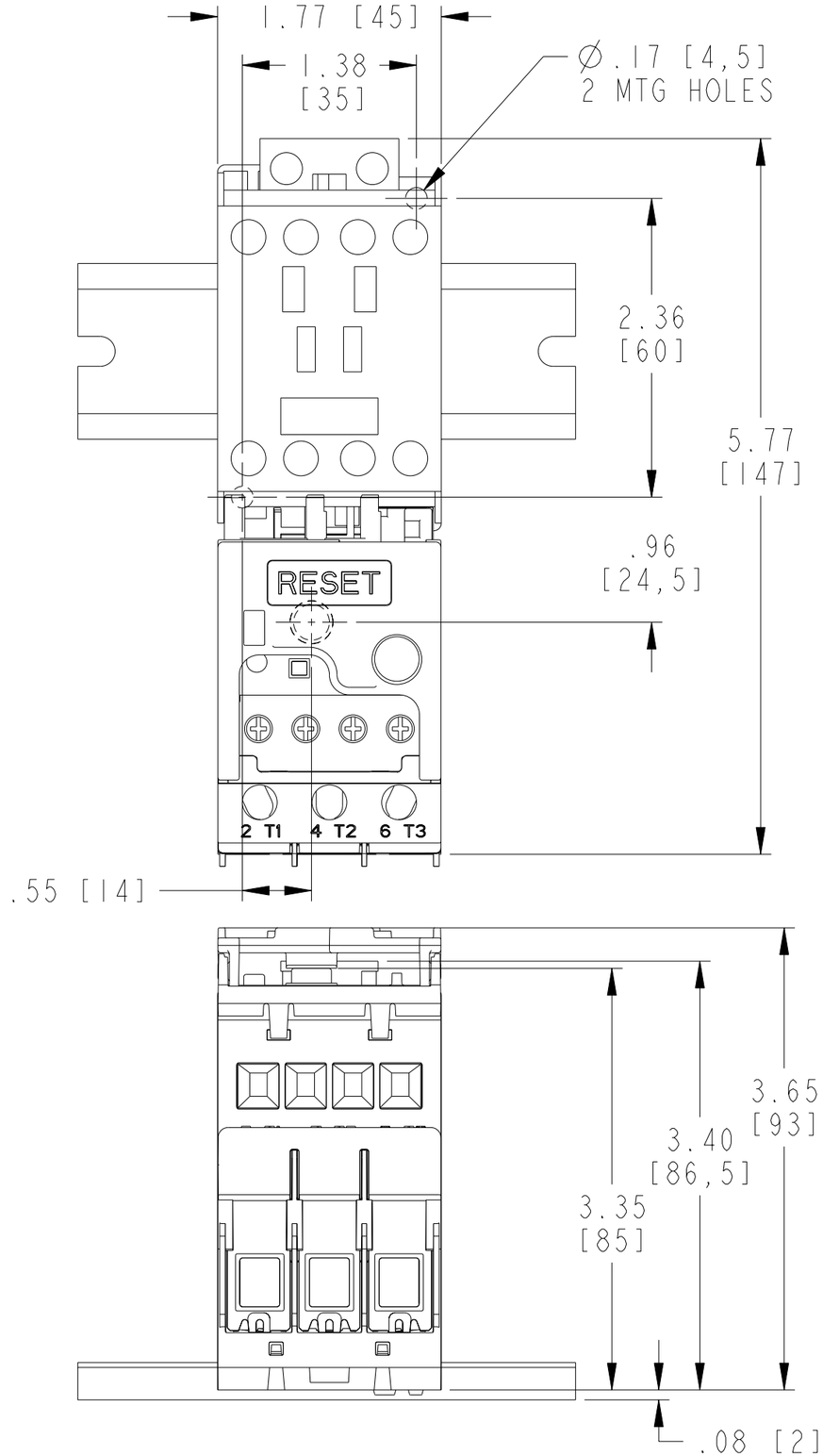

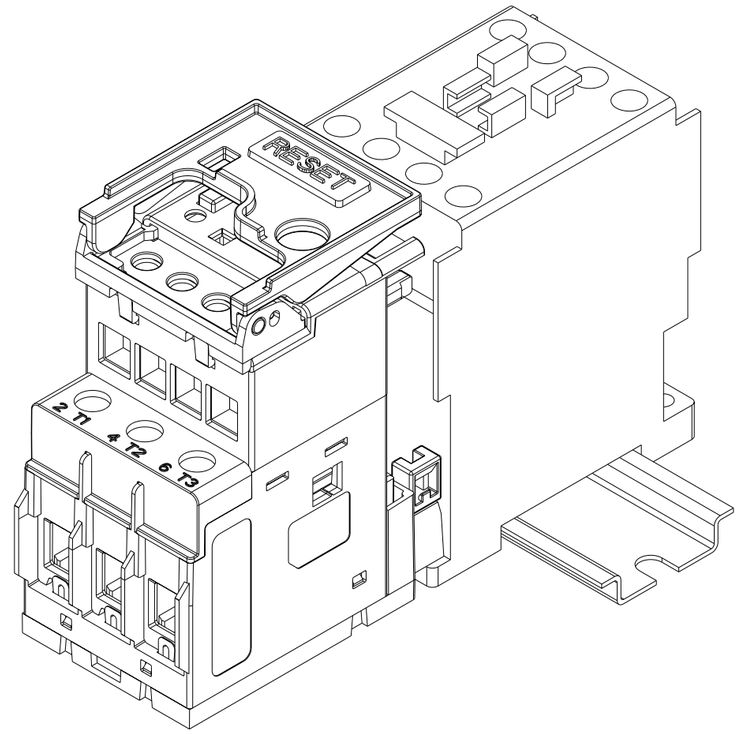

BUL 309-AO SIZE 0

10000080261.DRW