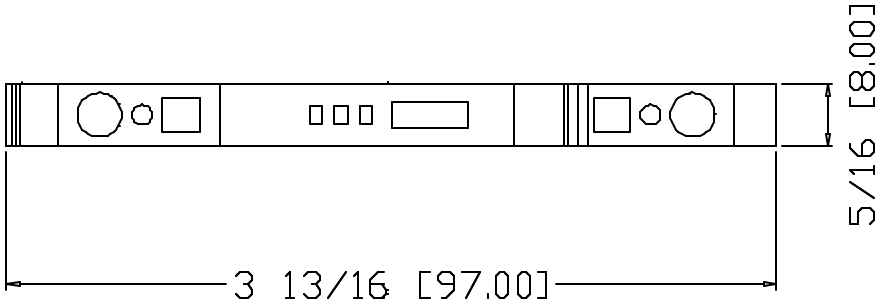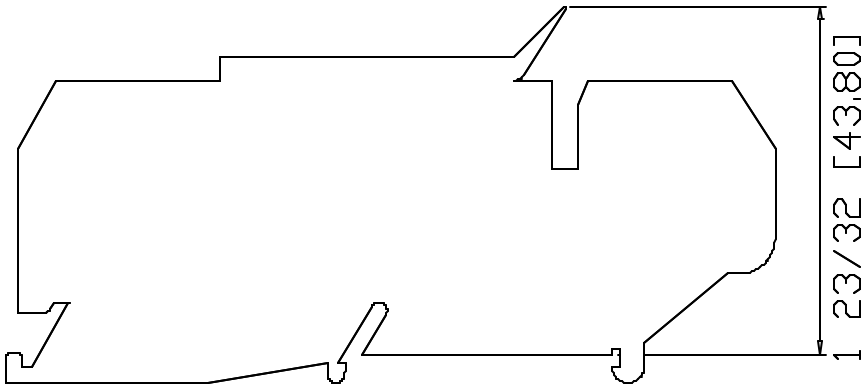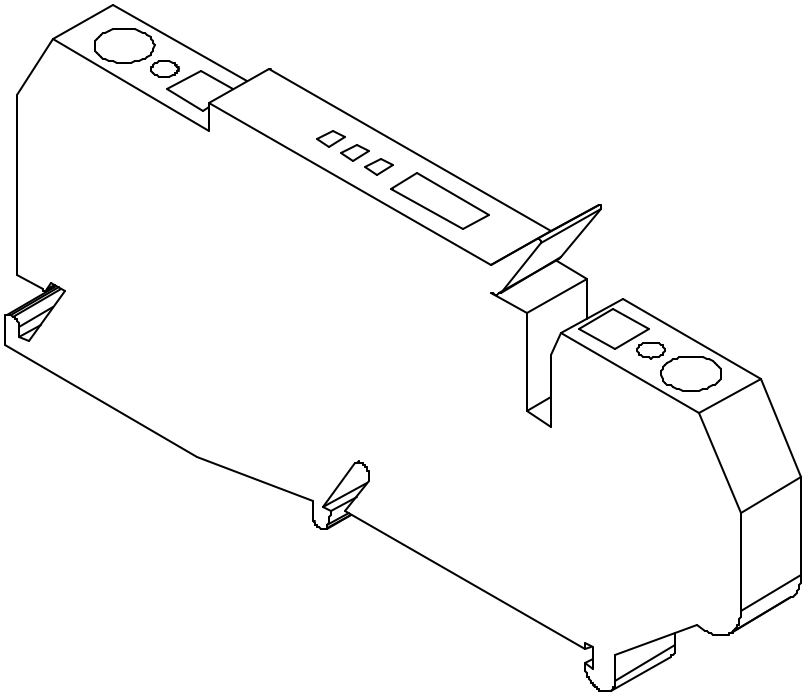1492-RFB4
5x20mm FUSE BLOCK, BLACK