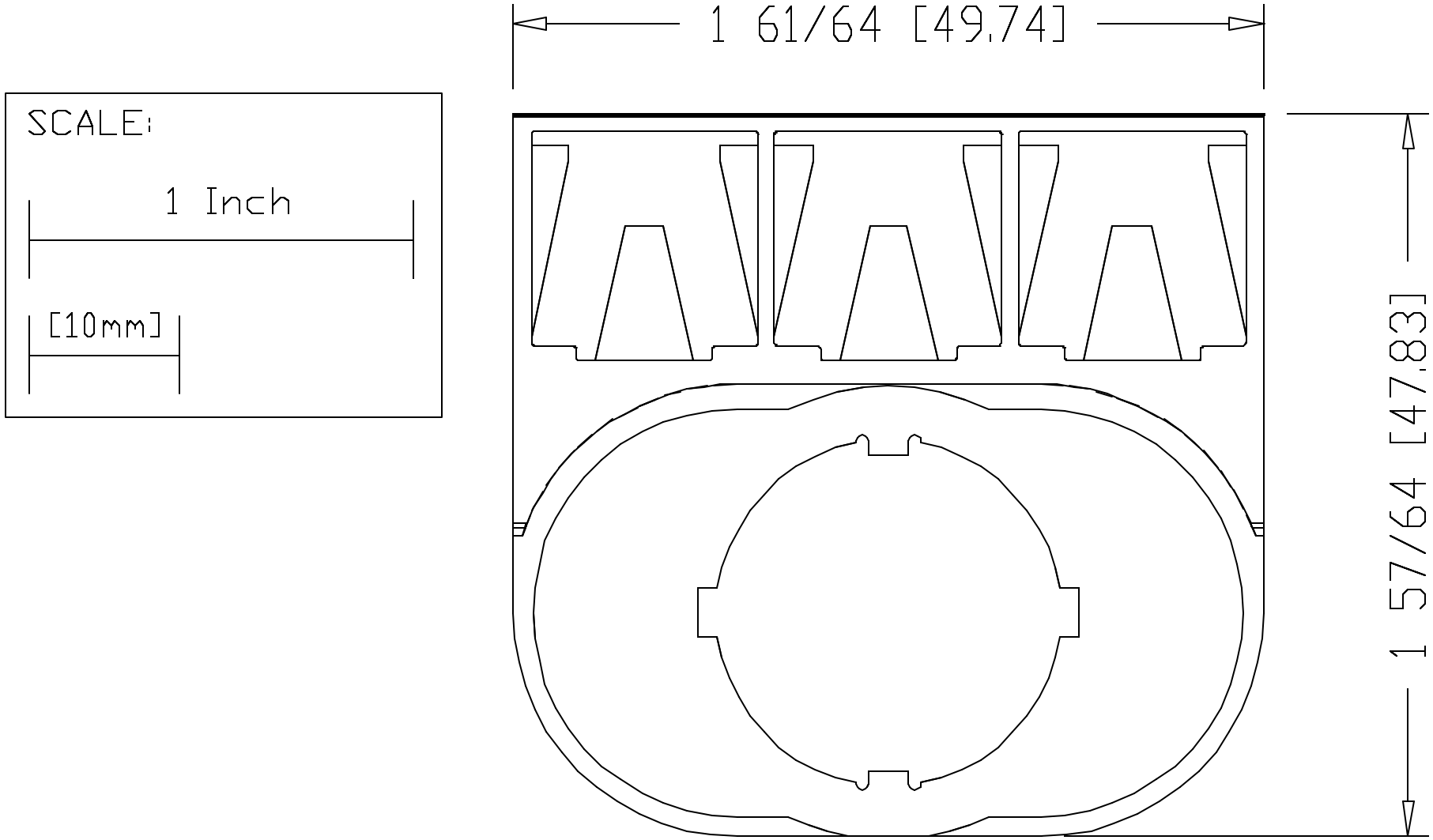
SCALE:
1 Inch
[10mm]
1 61/64 [49.74]
1 57/64 [47.83]