1761-L32 AWA
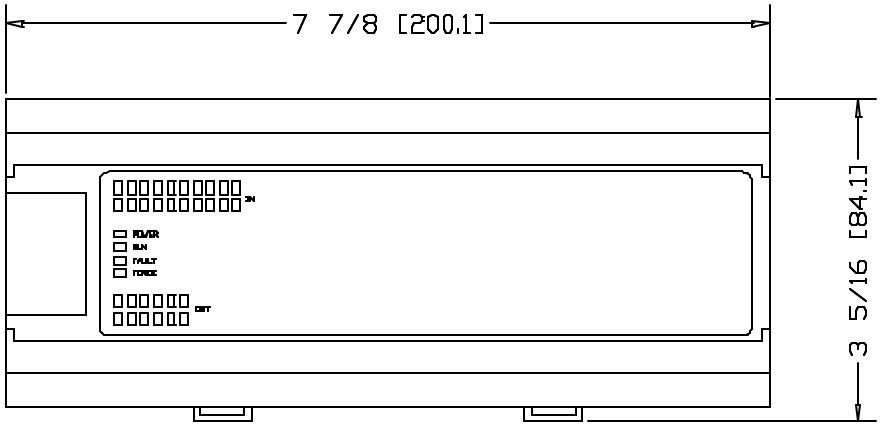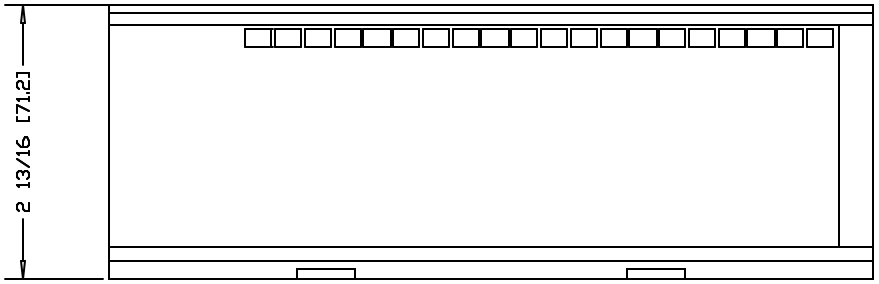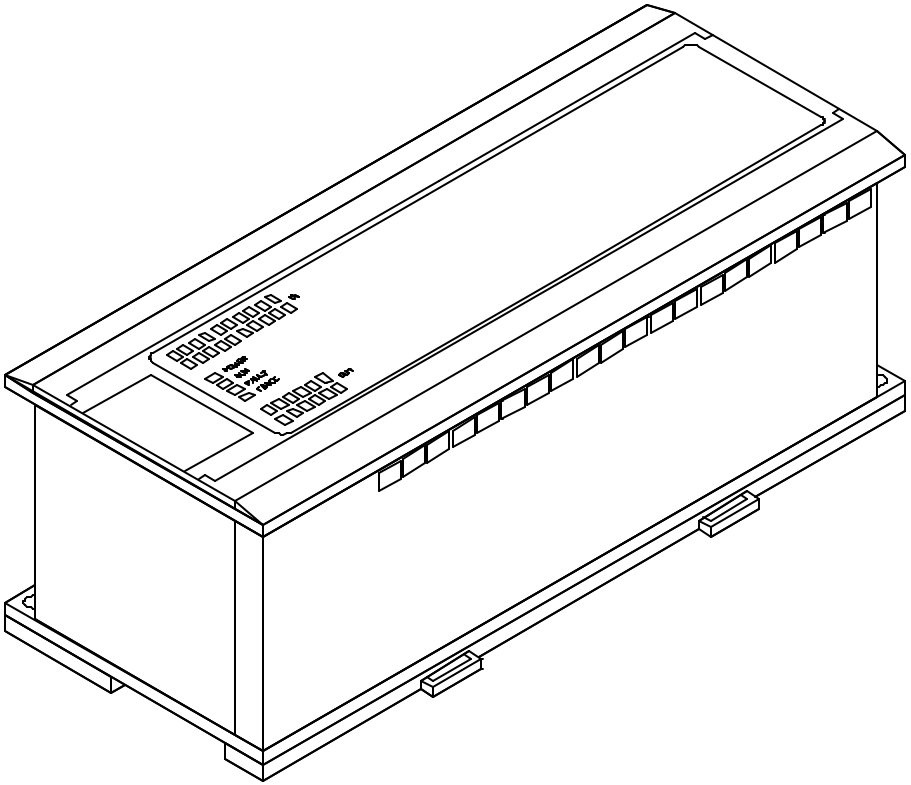
1761-L32 AWA: AC RELAY