1771-P4S1
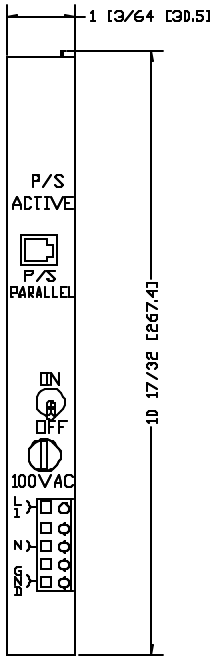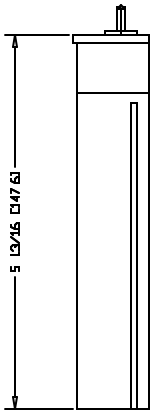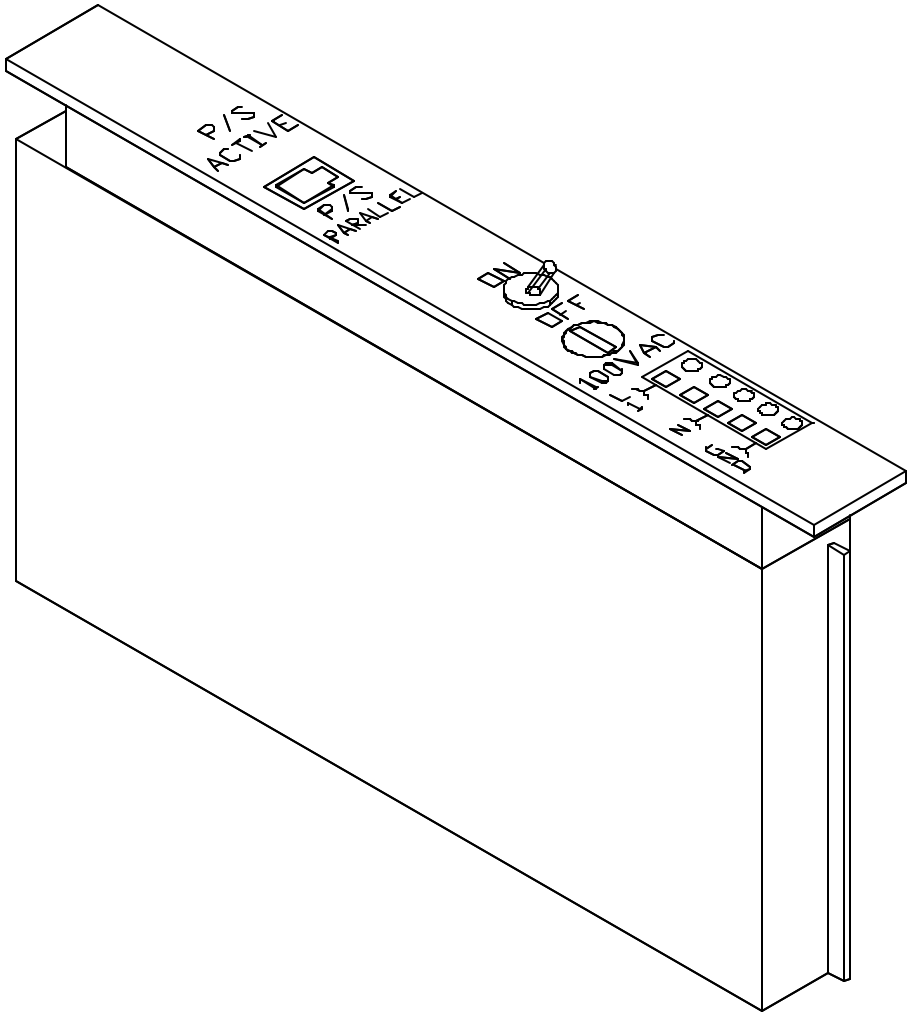
1771-P4S1: POWER SUPPLY, 1-SLOT MODULE, 8A, 100V AC