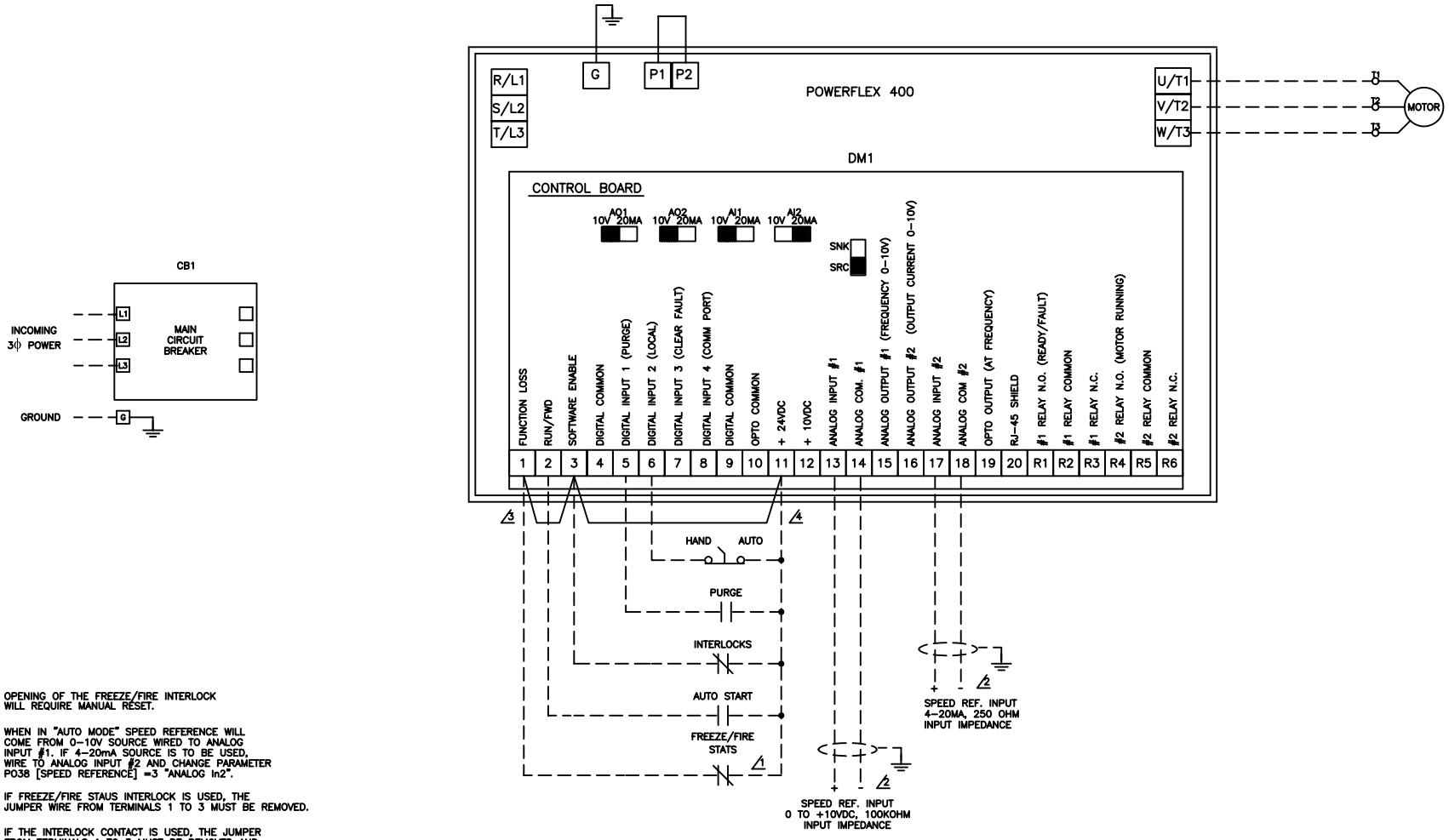

1. OPENING OF THE FREEZE/FIRE INTERLOCK WILL REQUIRE MANUAL RESET.
2. WHEN IN "AUTO MODE" SPEED REFERENCE WILL COME FROM 0–10V SOURCE WIRED TO ANALOG INPUT #1. IF 4–20mA SOURCE IS TO BE USED, WIRE TO ANALOG INPUT #2 AND CHANGE PARAMETER P038 [SPEED REFERENCE] =3 "ANALOG In2".
3. IF FREEZE/FIRE STAUS INTERLOCK IS USED, THE JUMPER WIRE FROM TERMINALS 1 TO 3 MUST BE REMOVED.
4. IF THE INTERLOCK CONTACT IS USED, THE JUMPER FROM TERMINALS 1 TO 3 MUST BE REMOVED AND THE JUMPER WIRE FROM TERMINALS 3 TO 11 SHOULD BE RELOCATED TO CONNECT TERMINALS 1 TO 11.

— — CONNECTIONS SUPPLIED BY CUSTOMER

DATE	BY	APPROVAL
		DESIGN REVIEW
		FOR MANUFACTURING
		AS SHIPPED
		AS COMMISSIONED

REV.	DATE	BY	ECN/CR. NO.

Rockwell Automation

THIS DRAWING IS THE PROPERTY OF ROCKWELL AUTOMATION, INC. OR ITS SUBSIDIARIES AND MAY NOT BE COPIED, USED OR DISCLOSED FOR ANY PURPOSE EXCEPT AS AUTHORIZED IN WRITING BY ROCKWELL AUTOMATION, INC.

TITLE
INTER-CONNECT DRAWING (CIRCUIT BREAKER)
PF400, 250-350HP/460VAC, NEMA1
STYLE A, FRAMES G & H, CONTROL

DR. BY REH/ACI	CHK. BY AWR/ACI	ENG. AWR/ACI	DWG. NO.	NEXT SH.	SH. NO.
DATE 10/9/06	DATE 10/9/06	DATE 10/9/06	97D01889–	1	1