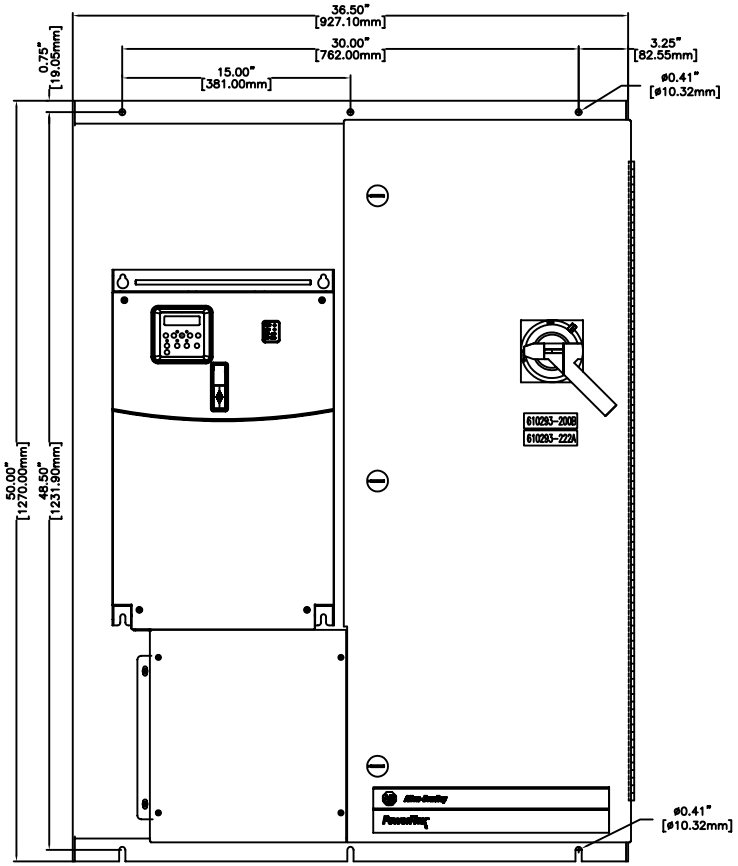

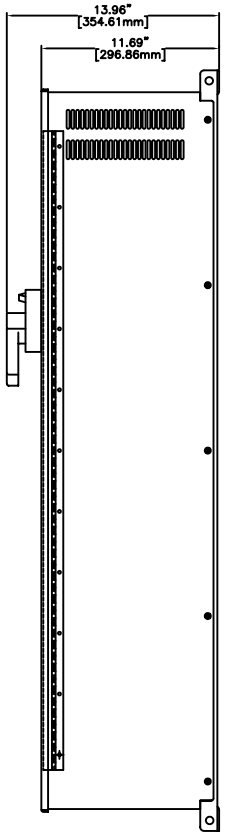

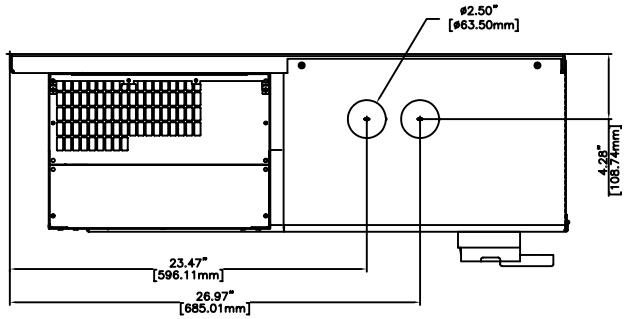

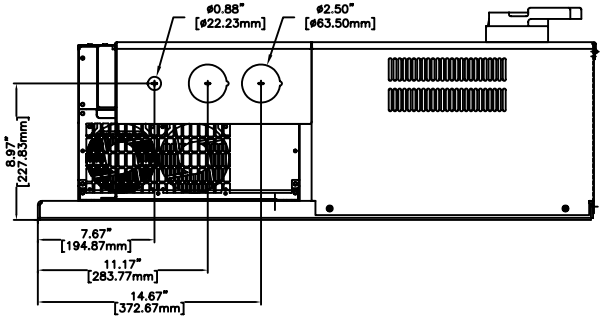

DATE	BY	APPROVAL
		DESIGN REVIEW
		FOR MANUFACTURING
		AS SHIPPED
		AS COMMISSIONED

REV.	DATE	BY	ECN/CR. NO.

Rockwell Automation

THIS DRAWING IS THE PROPERTY OF ROCKWELL AUTOMATION, INC.
OR ITS SUBSIDIARIES AND MAY NOT BE COPIED, USED OR DISCLOSED FOR ANY PURPOSE EXCEPT AS AUTHORIZED IN WRITING BY ROCKWELL AUTOMATION, INC.

TITLE
OUTLINE DRAWING - PF400, STYLE A
50HP @ 208VAC

DR. BY JRF/ACI DATE 4/2/04	CHK. BY JFH/ACI DATE 4/2/04	ENG. DATE	DWG. NO. 95D00694 –	NEXT SH. 1	SH. NO. 1

4/2/04