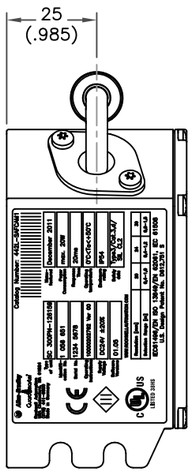

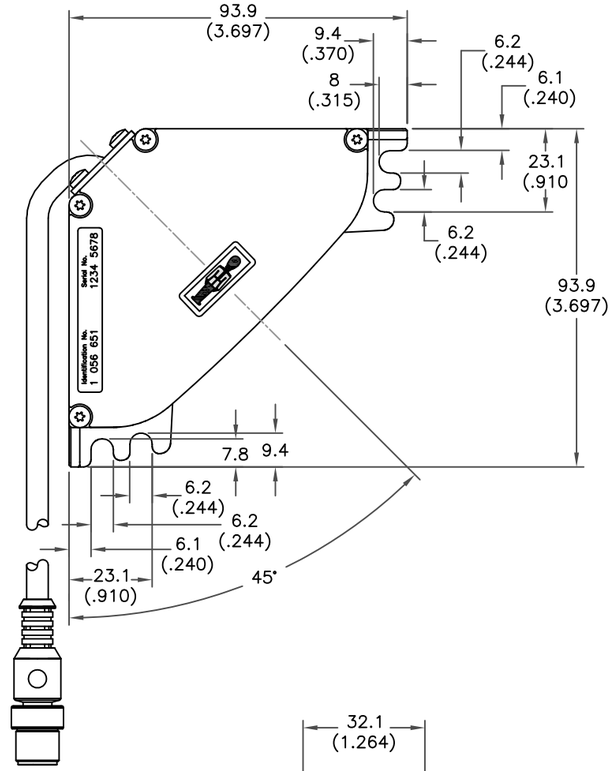

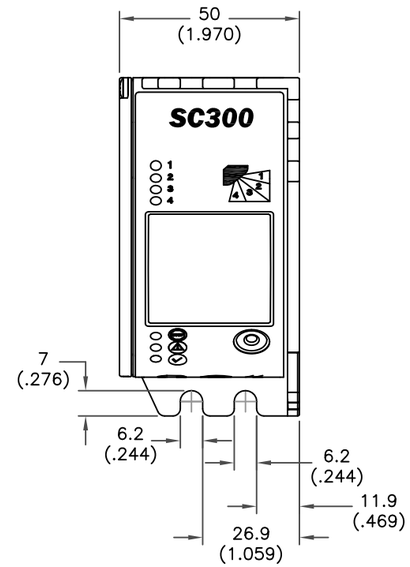

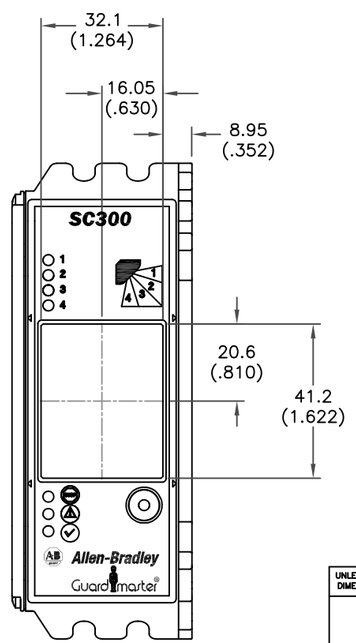

NOTE:

1. TAKEN FROM ENGINEERING DRAWING 10000211224

CATALOG NUMBER	SERIES	DESCRIPTION
442L–SAFCAM1	A	SC300 SAFETY CAMERA

UNLESS OTHERWISE SPECIFIED DIMENSIONS ARE IN MM [INCHES]

THIRD ANGLE PROJECTION

MATERIAL: N/A

FINISH: N/A

SCALE: 1 : 1

OUTLINE DRAWING
GUARDMASTER SC300
SAFETY CAMERA

DRW. B. FORTIER

DATE 1/25/2012

ROCKWELL AUTOMATION
FOR TECHNICAL SUPPORT CALL
+1 440.646.5800

CONFIDENTIAL AND PROPRIETARY INFORMATION. THIS DOCUMENT CONTAINS CONFIDENTIAL AND PROPRIETARY INFORMATION OF ROCKWELL AUTOMATION, INC. AND MAY NOT BE USED, COPIED OR DISCLOSED TO OTHERS, EXCEPT WITH THE AUTHORIZED WRITTEN PERMISSION OF ROCKWELL AUTOMATION, INC.

DWG. NO. 442L–SAFCAM1

VER. 00

SIZE C SHEET 1 OF 1