DRAWING FOR 20.50" X 30.00"
NEMA TYPE 4 STAINLESS STEEL ENCLOSURE

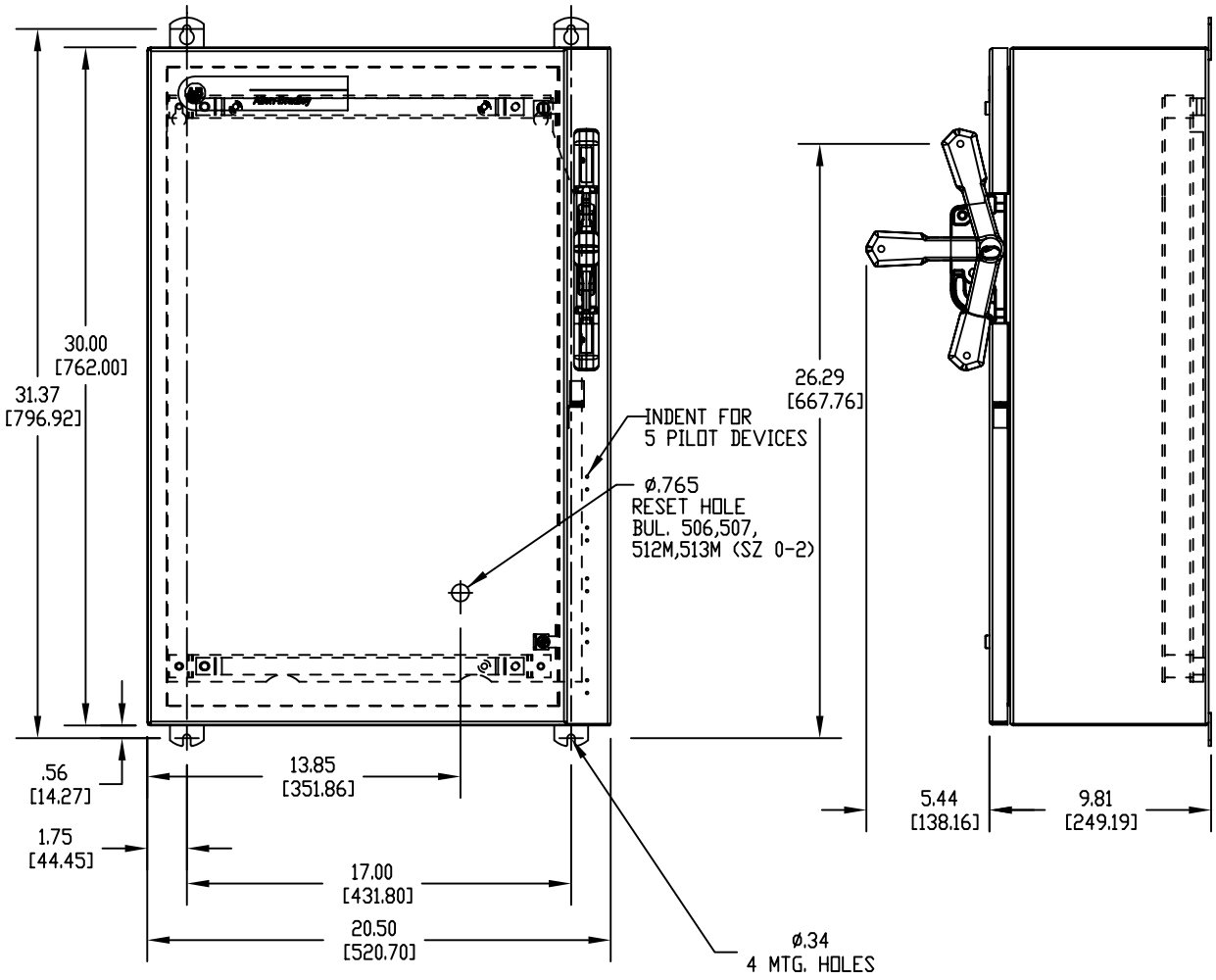

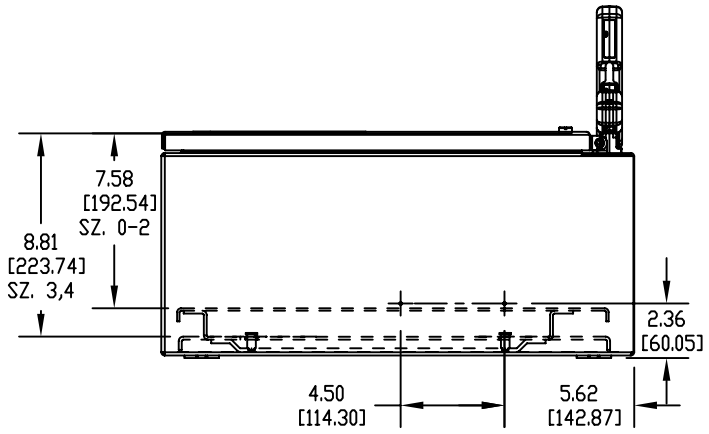

BOTTOM VIEW

THIS DWG APPLIES TO:

BUL. 506	- NEMA SIZE 0-1-2 100A-600V
BUL. 507	- NEMA SIZE 0-1-2
BUL. 512	- NEMA SIZE 2 100A-600V
BUL. 522	- NEMA SIZE 0-1-2
BUL. 523	- NEMA SIZE 0-1-2
BUL. 512M	- NEMA SIZE 1-2
BUL. 513M	- NEMA SIZES 1-2
BUL. 512	- NEMA SIZE 3
BUL. 513	- NEMA SIZE 3-4

NOTES:

1. ALL DIM'S. SHOWN IN PARENTHESES ARE IN MILLIMETERS.
2. ALL DIM'S. ARE APPROXIMATE AND NOT INTENDED FOR MANUFACTURING PURPOSES